本公司保留产品设计改进权，若有改动，恕不另行通知

All information in this document is substantially correct at time of printing and may be altered subsequently. Final weight and dimensions will depend on completed specification.

渣浆泵
Slurry
Pump

潜水排污泵
Submersible
Sewage
Pump

中开泵
Split Case
Pump

自吸泵
Self-Priming
Pump

端吸泵
End Suction
Pump

Gorrif Pump Solutions Co.
高瑞夫泵业（上海）有限公司

地址：上海市浦东新区金海路2449弄宝龙城市广场1号楼3层
Add: 3rd Floor, Building 1, Powerlong City Plaza, No.2449 Jinhai Rd., Pudong, Shanghai 201209, China.
电话（Tel）：0086-152 6152 7552
邮箱(E-mail)：sales@gorrifpumps.com
网址(Web)：www.gorrifpumps.com

ISSUE 1

高瑞夫泵业
GORRIF PUMP
SOLUTIONS

SHA(R) / SHH(R) 系列渣浆泵
SHA(R)/SHH(R) Series Slurry Pump

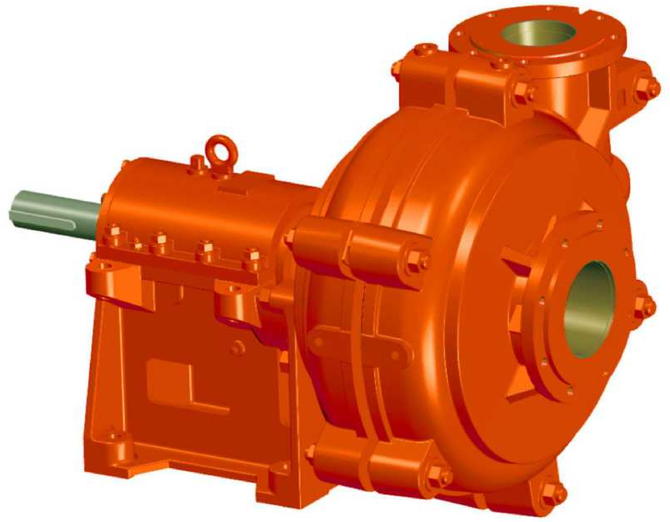

Gorrif Pump Solutions Co.
高瑞夫泵业（上海）有限公司

COMPANY PROFILE

公司简介

高瑞夫泵业（上海）有限公司（以下简称高瑞夫）是一家注册于上海洋山港临港自贸区的天生国际化企业。作为中国水泵及水处理行业整体解决方案的专家和领导者，其股东之一的三联泵业成立于1957年，数十年来持续专注于制造并销售中开泵、渣浆泵、多级泵、化工泵、潜水泵、轴流泵等，产品广泛应用于冶金、矿山、电力、化工、石油、市政、水利、消防，环保、供热、建筑等行业领域。公司拥有中国最先进之一的4000kW功率和30000m3/h流量的水泵测试中心，测试精度达到GB / T3216-2005标准，产品符合ISO，ASME，API，GB和JIS等国际标准。

高瑞夫作为其出口国际市场的平台，专注于其水泵及水处理整体解决方案的国际工程总承包（EPC）和贴牌代加工（ODM）业务。

凭借优质供应链，和可靠高效的全球营销和服务能力，高瑞夫竭诚希望为全球客户提供可定制、最及时、可实现智能化远程运维的泵及水处理整体解决方案。

Gorrif Pump Solutions Co. (hereafter Gorrif) is an international high-tech enterprise registered in Lingang Free Trade Zone of Shanghai Yangshan Port.

As an expert and leader in the total solution of Chinese pump and water treatment industry, San-lian Pump, one of Gorrif's shareholder, was established in 1957, and has continued to focus on the manufacture and sale of split-case pump, slurry pump, multistage pump, chemical pump, submersible pump, axial flow pump etc., which are widely applied in metallurgy, mining, electricity, chemical, petroleum, municipal, water conservancy, fire protection, environmental protection, heating, construction and other fields.

Sanlian Pump has one of the most advanced pump test center with 4000kW power and 30000m³/h flow rate in China, and the test precision meets the standard requirements of GB/T3216-2005. Our pumps comply with ISO, ASME, API, GB and JIS and other international standards.

As a platform for Sanlian's export to the international market, Gorrif focuses on EPC and ODM business of total solutions for pumps and water treatment.

With high-quality supply chain, reliable and efficient global marketing and service capabilities, Gorrif wholeheartedly hopes to provide global customers with customizable, the most timely and intelligent remote operation and maintenance total solutions for pumps and water treatment.

高瑞夫泵业
GORRIF PUMP SOLUTIONS

渣浆泵 Slurry Pump | 潜水排污泵 Submersible Sewage Pump | 中开泵 Split Case Pump | 自吸泵 Self-Priming Pump | 端吸泵 End Suction Pump

- **卧式渣浆泵SHA、SHA(R)系列**
  Normal horizontal centrifugal pump
- **高扬程卧式渣浆泵SHH、SHH(R)系列**
  High Pressure horizontal centrifugal pump

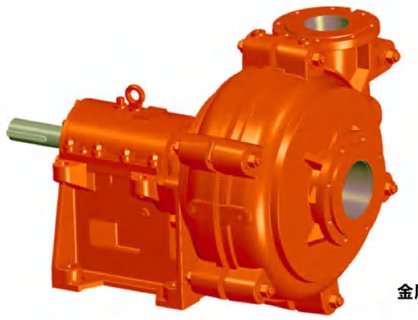

金属泵

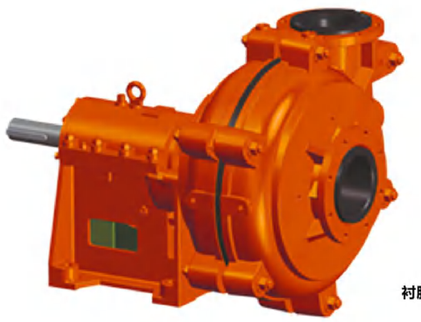

衬胶泵

型谱图 Slurry Pump Chart

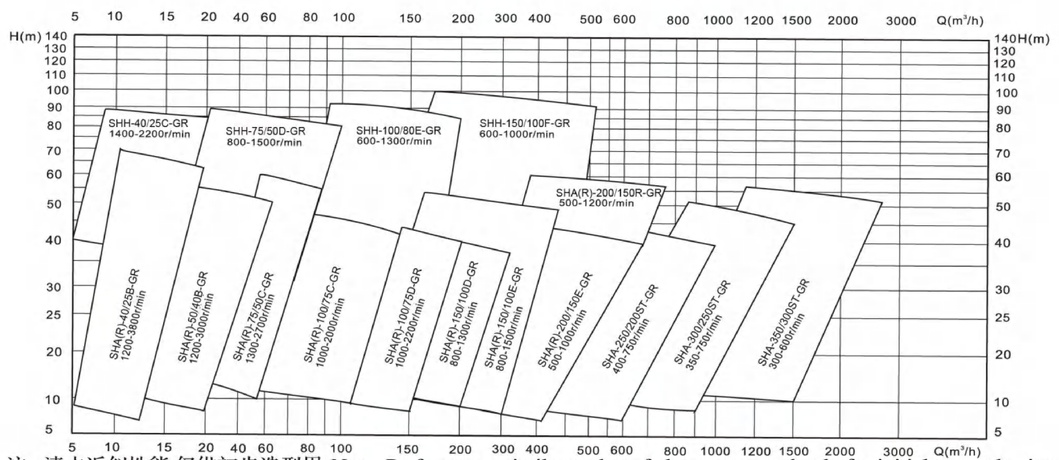

注：清水近似性能,仅供初步选型用 Note: Performance similar to that of clear water, and only for initial type selection

产品概述 Description

SHA/SHH 系列渣浆泵为单级单吸悬臂卧式离心泵,适用于冶金、矿山、煤炭、电力建材等工业部门输送含有悬浮固体颗粒的液体,如精矿、尾矿、灰渣、煤渣、水泥、泥土、砂矿等强硬度、强腐蚀高浓度渣浆。被输送的固液混合物强度不得超过80℃，重量浓度可达60%。

SHAR/SHHR系列衬胶泵，广泛应用于冶金、矿山、煤炭电厂、化工、建材等工矿企业,输送含有悬浮固体颗粒的浆体介质,具有良好的耐磨性、抗撕性、耐冲性、高弹性及化学稳定性。抽送无棱角的细颗粒,其效果好于金属。通常工作条件为:输送矿浆浓度<60%,介质温度<80℃,固体颗粒为80-200目。

SHA/SHH type slurry pump is single stage single suction cantilever horizontal centrifugal pump. It is desiened for departments needing to transport liquids containing floating particles. as in metallurgv, mines, coal, electricity and construction material industry.It can transport high density slurry containing highly hard abrasive particles like concrete, reje cts, coal cinder, cement, clay, grit, etc. The temperature of slurry can not be more than 80℃, and the slurry density can reach 60% in weight.

SHA/SHH 系列金属泵结构示意图
SHA/SHH Structural Diagram

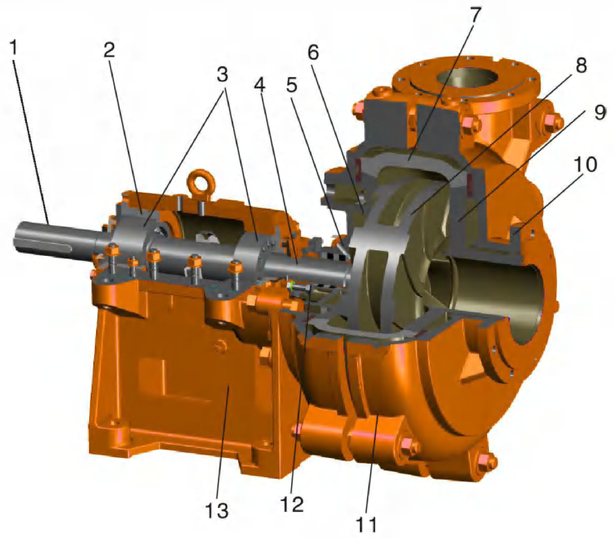

1	轴	Shaft
2	托架盖	Bracket Cover
3	轴承	Bearing
4	轴套	Shaft Sleeve
5	填料箱	Stuffing Box
6	后护板	Frame Plate Liner Insert
7	护套	Volute Liner
8	叶轮	Impeller
9	前护板	Throatbush
10	泵盖	Cover Plate
11	泵体	Frame Plate
12	轴封	Shaft Seal
13	托架体	Bracket Body

执行标准符合：JB/T8096-1998;GB/T5657-1995.
The pump follow the standard of JB/T8096:GB.T5657-1995

www.gorrifpumps.com

SHA(R) / SHH(R) 系列衬胶泵结构示意图

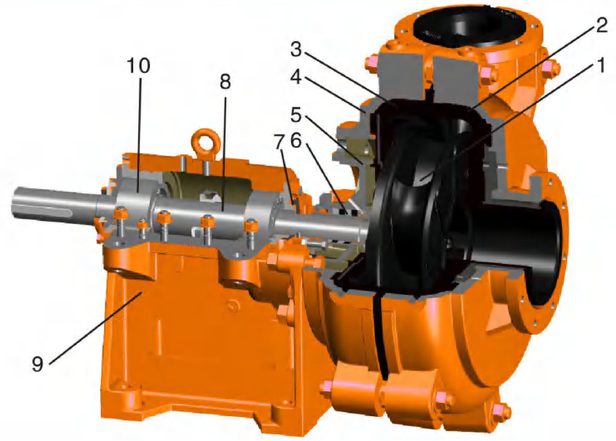

1、叶轮	Impeller
2、前护套	Front Sheath
3、后护套	Back Sheath
4、泵体	Frame Plate
5、减压盖	Stuffing Box
6、轴封	Shaft Seal
7、轴套	Shaft Sleeve
8、轴	Shaft
9、托架	Bracket
10、轴承	Bearing

结构说明 Structural Illustration

1、SHA/SHH 系列渣浆泵的入口为轴向、出口为径向,用户可根据需要在圆周方向上调整出口方向,调整最小角度为450。
2、 SHA/SHH 系列渣浆泵 从吸入口方向看为逆时针旋转,常用的传动方式有四种: DC型、CV型、ZV型、CR型,见图三。
3、轴封采用软填料密封或副叶轮密封。
4、SHAR/SHHR系列衬胶泵具有良好的耐磨性、抗撕性、耐冲性、高弹性及化学稳定性。

1、The inlet of SHA/SHH-type pump is axial, and its outlet is radial. The user can make adjustments on the direction of inlet in the direction of circle. of which the limitation angle is 45°
2、SHA/SHH-type pump rotates anticlock wise from the direction of inlet. There are usually four kinds of drive: DC, CV, ZV and CR as shown in diagram 3.
3、Soft packing seal or auxiliary-impeller seal is used for the shaft seal.
4、SHA, SHH pump has good wear resistance, tear resistance, impact resistance, high elasticity and chemical stability.

性能范围 Performance

排出口直径 DN= 25–300mm Outlet Diameter DN= 25-300mm
流　量 Q=3.6–2455.2m^3/h Capacity Q=3.6-2455.2m^3/h
单级扬程 H=5–98 m Single Stage Head H= 5-98 m
配带电机功率 2.2–480 Kw Matched Motor Power: 2.2-480Kw

型号意义 Code Identification

SHA (R)-100/75 C -GR

- GR 高瑞夫泵业 Gorrif Pump
- C 传动架 Transmission Frame
- 100 进口 /出口公称通径 Internal Diameter of Inlet and Outlet
- (R) 衬胶泵 Rubberized Dredge Pump
- SHA 渣浆泵 Slurry Pump

www.gorrifpumps.com

性能参数表 Performance Parameters

型号 Type	流量 Capacity (m³/h)	扬程 Head (m)	效率 Efficiency (%)	轴功率 Shaft Power (kw)	必需汽蚀余量 (NPSH)r (m)	转速 Speed (r/min)	配带电机 Matched Motor 功率 Power (kw)	配带电机 Matched Motor 型号 Type	传动形式 Drive Mode DC	CV	ZV	CR	*DC	*CR	外形尺寸 Outline Dimension (mm) 长 Length (mm)	宽 Width (mm)	高 Height (mm)	泵重 Weight (kg)
SHA(R)-40/25B-GR	3.6 7.56 11.52	7 6 5	20 30 30	0.34 0.41 0.52	2	1200	2.2	$Y100L_1-4$		✓				✓	583	340	368	91
SHA(R)-40/25B-GR	4.39 8.39 12.42	9.7 8.7 7.2	20 30 30	0.58 0.66 0.81	2	1420	2.2	$Y100L_1-4$					✓		583	340	368	91
SHA(R)-40/25B-GR	4.68 8.64 12.6	12 11.5 10	20 30 30	0.77 0.9 1.14	2	1600	2.2	Y90L-2		✓					583	340	368	91
SHA(R)-40/25B-GR	5.04 9.36 13.68	15.4 14.6 13	20 30 30	1.06 1.24 1.61	2	1800	2.2 3.0	Y90L-2 Y100L-2		✓ ✓				✓	583	340	368	91
SHA(R)-40/25B-GR	5.4 10.08 14.4	19 18 16.5	20 30 30	1.4 1.65 2.16	2	2000	2.2 3.0	Y90L-2 Y100L-2		✓ ✓				✓	583	340	368	91
SHA(R)-40/25B-GR	5.76 10.44 15.12	23 22 20	20 30 35	1.8 2.08 2.35	2	2200	3.0 4.0	Y100L-2 Y112M-2		✓ ✓				✓ ✓	583	340	368	91
SHA(R)-40/25B-GR	6.12 11.16 15.84	27.3 26 24	20 30 35	2.28 2.63 2.96	2	2400	4.0 5.5	Y112M-2 $Y132S_1-2$		✓ ✓				✓ ✓	583	340	368	91
SHA(R)-40/25B-GR	6.48 11.52 16.56	32 30.8 28.5	20 30 35	2.82 3.22 3.67	2	2600	5.5 7.5	$Y132S_1-2$ $Y132S_2-2$		✓ ✓				✓ ✓	583	340	368	91
SHA(R)-40/25B-GR	6.48 11.88 17.28	37.1 35.8 33.4	20 30 35	3.27 3.86 4.49	2.2	2800	5.5 7.5	$Y132S_1-2$ $Y132S_2-2$			✓ ✓			✓ ✓	583	340	368	91
SHA(R)-40/25B-GR	6.48 12.24 18	40.5 39.2 36.5	20 30 35	3.57 4.36 5.11	2.2 2.5	2920	7.5	$Y132S_2-2$					✓		583	340	368	91
SHA(R)-40/25B-GR	6.48 12.24 18	43 41.5 38.5	20 30 35	3.79 4.61 5.39	2.2 3	3000	7.5 11	$Y132S_2-2$ $Y160M_1-2$				✓		✓ ✓	583	340	368	91
SHA(R)-40/25B-GR	6.48 12.6 18.72	49 47.5 44	20 30 35	4.32 5.43 6.41	2.5 3	3200	11	$Y160M_1-2$				✓		✓	583	340	368	91
SHA(R)-40/25B-GR	6.84 14.76 19.44	55.5 53 50.2	20 35 40	5.17 6.09 6.64	2.5 3.1	3400	11	$Y160M_1-2$				✓		✓	583	340	368	91

注：1.带*记号为配底座； 2.所列性能均为清水条件下性能
Notice: 1. Markings with ＊is auxiliary base; 2. The data listed above are that of clear water performance.

‖ www.gorrifpumps.com ‖

SHA(R)、SHH(R)系列渣浆泵
SHA(R)/SHH(R) Series Slurry Pump

型号 Type	流量 Capacity (m³/h)	扬程 Head (m)	效率 Efficiency (%)	轴功率 Shaft Power (kw)	必需汽蚀余量 (NPSH)r (m)	转速 Speed (r/min)	配带电机 Matched Motor 功率 Power (kw)	配带电机 Matched Motor 型号 Type	传动形式 Drive Mode DC	CV	ZV	CR	*DC	*CR	外形尺寸 Outline Dimension (mm) 长 Length (mm)	宽 Width (mm)	高 Height (mm)	泵重 Weight (kg)
SHA(R)-40/25B-GR	6.84 14.76 20.88	62 59.6 56.3	20 35 40	5.77 6.84 8	2.5 3.5	3600	11 15	$Y160M_1-2$ $Y160M_2-2$			✓ ✓			✓ ✓	583	340	368	91
SHA(R)-40/25B-GR	6.84 15.12 21.6	69 66.7 63	20 35 40	6.43 7.85 9.26	3 3.5	3800	11 15	$Y160M_1-2$ $Y160M_2-2$			✓ ✓			✓ ✓	583	340	368	91
SHA(R)-50/40B-GR	7.2 14.4 21.6	8.5 8 7	18 25 35	0.93 1.25 1.18	2.5	1200	2.2	$Y100L_1-4$		✓				✓	592	371	381	104
SHA(R)-50/40B-GR	7.92 15.12 22.68	12 11.2 10.3	9 30 35	2.87 1.54 1.82	2.5	1420	3.0	$Y100L_2-4$				✓		✓	592	371	381	104
SHA(R)-50/40B-GR	9 18 25.92	15.1 14.4 13	20 33 38	1.85 2.14 2.41	2.5	1600	4.0	Y112M-2		✓				✓	592	371	381	104
SHA(R)-50/40B-GR	10.8 19.8 28.8	19.5 18.3 17	23 35 40	2.49 2.82 3.33	2.5	1800	4.0 5.5	Y112M-2 $Y132S_1-2$		✓ ✓				✓ ✓	592	371	381	104
SHA(R)-50/40B-GR	11.52 21.6 33.12	24 23 20.8	25 37 43	3.01 3.66 4.36	2.5	2000	5.5 7.5	$Y132S_1-2$ $Y132S_2-2$		✓ ✓				✓ ✓	592	371	381	104
SHA(R)-50/40B-GR	12.96 25.2 36	29 27.4 25	29 41 45	3.53 4.59 5.44	3	2200	7.5 11	$Y132S_2-2$ $Y160M_1-2$		✓	✓			✓ ✓	592	371	381	104
SHA(R)-50/40B-GR	14.4 27 38.88	34.4 32.6 29.6	30 42 45	4.5 5.71 6.96	4	2400	11	$Y160M_1-2$			✓			✓	592	371	381	104
SHA(R)-50/40B-GR	15.48 28.8 42.48	40.4 38.3 34.6	30 43 45	5.68 6.98 8.89	3 5	2600	11 15	$Y160M_1-2$ $Y160M_2-2$			✓ ✓			✓ ✓	592	371	381	104
SHA(R)-50/40B-GR	16.2 30.6 46.08	47 45 40.05	30 42 45	6.91 8.93 11.16	3.2 6	2800	15	$Y160M_2-2$			✓			✓	592	371	381	104
SHA(R)-50/40B-GR	18 32.4 48.6	54 51 46	30 42 45	8.82 10.71 13.32	3 3.5 6.5	3000	15	$Y160M_2-2$			✓			✓	592	371	381	104
SHA(R)-75/50C-GR	21.6 32.4 42.48	14.5 14 13	45 52 56	1.9 2.37 2.68	2.5	1300	4 5.5	Y112M-4 Y132S-4		✓ ✓		✓ ✓		✓	768	441	464	191

注：1.带*记号为配底座； 2.所列性能均为清水条件下性能
Notice: 1. Markings with ＊is auxiliary base; 2. The data listed above are that of clear water performance.

‖ www.gorrifpumps.com ‖

型号 Type	流量 Capacity (m³/h)	扬程 Head (m)	效率 Efficiency (%)	轴功率 Shaft Power (kw)	必需汽蚀余量 (NPSH)r (m)	转速 Speed (r/min)	配带电机 Matched Motor 功率 Power (kw)	型号 Type	传动形式 Drive Mode DC	CV	ZV	CR	*DC	*CR	外形尺寸 Outline Dimension (mm) 长 Length	宽 Width	高 Height	泵重 Weight (kg)
SHA(R)-75/50C-GR	25.2 36 46.08	17.3 16.7 15.8	45 52 56	2.64 3.15 3.54	2.5	1440	5.5	Y132S-4					✓		768	441	464	191
SHA(R)-75/50C-GR	25.2 36 48.6	19.3 18.7 17.5	45 52 56	2.94 3.53 4.14	2.5	1500	5.5 7.5	Y132S-4 Y132M-4		✓ ✓		✓ ✓		✓ ✓	768	441	464	191
SHA(R)-75/50C-GR	27 39.6 52.2	22 21 20	45 52 56	3.6 4.36 5.08	3	1600	7.5	Y132M-4		✓		✓		✓	768	441	464	191
SHA(R)-75/50C-GR	28.8 43.2 55.8	24.8 23.8 22.2	45 53 56	4.32 5.28 6.02	2.5 3.5	1700	7.5 11	Y132M-4 Y160M-4		✓ ✓		✓ ✓		✓ ✓	768	441	464	191
SHA(R)-75/50C-GR	30.24 45 58.68	27.8 26.3 25	45 53 56	5.09 6.08 7.13	3 4	1800	11 11 15	Y160M1-2 Y160M-4 Y160M2-2		 ✓		✓		✓	768	441	464	191
SHA(R)-75/50C-GR	32.4 46.8 61.2	31 30 28	45 52 56	6.08 7.35 8.33	3 4.2	1900	11 15	Y160M-4 Y160L-4		✓		✓ ✓		✓ ✓	768	441	464	191
SHA(R)-75/50C-GR	33.48 50.4 65.52	34.2 32.6 30.7	45 53 56	6.93 8.44 9.78	3.2 4.6	2000	15	Y160M2-2		✓		✓		✓	768	441	464	191
SHA(R)-75/50C-GR	35.28 52.2 69.12	38 36.1 34	45 53 56	8.11 9.68 11.42	3.5 5.2	2100	15 18.5 22	Y160M2-2 Y160L-2 Y180M-2			✓	✓ ✓		✓ ✓	768	441	464	191
SHA(R)-75/50C-GR	37.08 54 72	41.3 39.7 37.4	45 53 56	9.27 11.02 13.1	3 4 5.5	2200	18.5 22	Y160L-2 Y180M-2			✓ ✓	✓ ✓		✓ ✓	768	441	464	191
SHA(R)-75/50C-GR	37.8 57.6 75.6	45.2 43.4 40.5	45 53 56	10.34 12.84 14.88	3 4.5 6	2300	22 30	Y180M-2 Y200L1-2			✓ ✓	✓ ✓		✓ ✓	768	441	464	191
SHA(R)-75/50C-GR	46.08 64.8 81	53.5 51 48	45 52 56	14.9 17.3 18.9	5 7	2500	22 30	Y180M-2 Y200L1-2			✓ ✓	✓ ✓		✓ ✓	768	441	464	191
SHA(R)-75/50C-GR	50.4 64.8 88.56	62.3 60 56	45 52 56	18.7 20.4 24.1	4 5.5 8	2700	30	Y200L1-2			✓	✓		✓	768	441	464	191
SHA(R)-100/75C-GR	28.8 68.4 108	11 10.1 7.6	50 69 65	1.72 2.73 3.44	2 2.2	1000	5.5	Y132S-4		✓		✓		✓	843	527	524	263

注：1.带*记号为配底座； 2.所列性能均为清水条件下性能
Notice: 1. Markings with ＊is auxiliary base; 2. The data listed above are that of clear water performance.

www.gorrifpumps.com

SHA(R)、SHH(R)系列渣浆泵
SHA(R)/SHH(R) Series Slurry Pump

型号 Type	流量 Capacity (m³/h)	扬程 Head (m)	效率 Efficiency (%)	轴功率 Shaft Power (kw)	必需汽蚀余量 (NPSH)r (m)	转速 Speed (r/min)	配带电机 Matched Motor 功率 Power (kw)	型号 Type	传动形式 Drive Mode DC	CV	ZV	CR	*DC	*CR	外形尺寸 Outline Dimension (mm) 长 Length	宽 Width	高 Height	泵重 Weight (kg)
SHA(R)-100/75C-GR	32.4 72 111.6	13.2 12.2 9.6	50 69 67	2.33 3.47 4.35	2 2.4	1100	5.5 7.5 7.5	Y132S-4 Y132M-4 Y160M-6		✓ ✓		 ✓		✓ ✓	843	527	524	263
SHA(R)-100/75C-GR	36 75.5 115.92	15.9 14.7 12.2	50 68 68	3.12 4.45 5.66	2 2.7	1200	7.5 11	Y132M-4 Y160M-4		✓ ✓				✓ ✓	843	527	524	263
SHA(R)-100/75C-GR	39.6 82.8 122.4	18.6 17.2 14.6	50 68 69	4.01 5.7 7.05	2.2 3	1300	11	Y160M-4		✓		✓		✓	843	527	524	263
SHA(R)-100/75C-GR	43.2 86.47 126.7	21.6 20.2 17.3	50 67 70	5.08 7.13 8.53	2.5 3.5	1400	11 15	Y160M-4 Y160L-4		✓ ✓		✓ ✓		✓	843	527	524	263
SHA(R)-100/75C-GR	45 90 129.6	23.4 21.8 19	50 67 70	5.74 7.97 9.58	2 2.7 3.6	1460	15	Y160L-4					✓		843	527	524	263
SHA(R)-100/75C-GR	50.4 93.6 136.8	28 26.4 23	50 66 70	7.69 10.2 12.24	2.3 3.1 4.2	1600	18.5	Y180M-4			✓	✓		✓	843	527	524	263
SHA(R)-100/75C-GR	54 100.8 144	31.8 30 26	50 66 70.5	9.35 12.48 14.46	2.6 3.5 4.6	1700	18.5 22	Y180M-4 Y180L-4			✓ ✓	✓ ✓		✓ ✓	843	527	524	263
SHA(R)-100/75C-GR	54 100.8 149.4	35.6 33.6 29.5	50 66 70.5	10.47 13.96 17.02	3 3.8 5	1800	22 30 30	Y180M-2 Y200L-4 Y200L1-2			✓	✓ ✓		✓ ✓	843	527	524	263
SHA(R)-100/75C-GR	57.6 108 154.8	39.7 37.6 33.2	50 66 70.5	12.45 16.75 19.84	3.2 4.2 5.5	1900	30 30	Y200L1-2 Y200L-4			 ✓	✓		✓	843	527	524	263
SHA(R)-100/75C-GR	61.2 108 154.8	44 42 37.1	50 65 71	14.67 19 22.02	3.6 4.5 6	2000	30	Y200L1-2				✓		✓	843	527	524	263
SHA(R)-100/75D-GR	39.7 70.5 89.2	9.8 9.1 7.9	60	2.86	2 2.2	1000	5.5	Y132S-4				✓			943	538	592	363
SHA(R)-100/80D-GR	43.7 77.6 98.1	11.8 11 9.5	60	3.81	2 2.4	1100	5.5 7.5	Y132S-4 Y132M-4		✓ ✓		✓ ✓			943	538	592	363
SHA(R)-100/80D-GR	47.7 84.6 106.9	14 13 11.2	60	4.9	2 2.7	1200	7.5 11	Y132M-4 Y160M-4				✓ ✓			943	538	592	363

注：1.带*记号为配底座； 2.所列性能均为清水条件下性能
Notice: 1. Markings with ＊is auxiliary base; 2. The data listed above are that of clear water performance.

www.gorrifpumps.com

型号 Type	流量 Capacity (m^3/h)	扬程 Head (m)	效率 Efficiency (%)	轴功率 Shaft Power (kw)	必需汽蚀余量 (NPSH)r (m)	转速 Speed (r/min)	配带电机 Matched Motor 功率 Power (kw)	配带电机 Matched Motor 型号 Type	传动形式 Drive Mode DC	CV	ZV	CR	* DC	* CR	外形尺寸 Outline Dimension (mm) 长 Length	宽 Width	高 Height	泵重 Weight (kg)
SHA(R)-100/80D-GR	51.7 91.7 115.9	16.5 15.4 13.3	60	6.3	2.2	1300	11	Y160M−4		✓		✓			943	538	592	363
SHA(R)-100/80D-GR	55.7 98.8 124.9	19.1 17.8 15.4	60	7.85	2.5	1400	11 15 18.5	Y160M−4 Y160L−4 Y180M−4			✓	✓ ✓			943	538	592	363
SHA(R)-100/80D-GR	58.1 103 130.1	20.8 19.4 16.8	61	8.92	2.7	1460	15 18.5	Y160L−4 Y180M−4					✓ ✓		943	538	592	363
SHA(R)-100/80D-GR	63.6 112.8 142.6	25 23.3 20.1	61	11.73	3.1	1600	18.5 22	Y180M−4 Y180L−4			✓ ✓	✓ ✓			943	538	592	363
SHA(R)-100/80D-GR	67.6 119.9 151.6	28.3 26.3 22.7	61	14.07	3.5	1700	22 30	Y180L−4 Y200L−4			✓ ✓	✓ ✓			943	538	592	363
SHA(R)-100/80D-GR	71.6 127 160.6	31.7 29.5 25.5	61	16.72	3.8	1800	37 30 37	Y225S−4 $Y200L_1$−2 $Y200L_2$−2		✓	✓	✓ ✓		✓	943	538	592	363
SHA(R)-100/80D-GR	75.5 134 169.5	35.2 32.8 28.3	61	19.38	4.2	1900	30 37	$Y200L_1$−2 $Y200L_1$−2			✓ ✓	✓ ✓		✓	943	538	592	363
SHA(R)-100/80D-GR	79.5 141 178.3	39.1 36.4 31.5	61	22.9	4.5	2000	37 45	Y225S−4 Y225M−4			✓	✓ ✓		✓ ✓	943	538	592	363
SHA(R)-100/80D-GR	87.5 155.2 196.3	47.3 44 38	61	30.5	4.8	2200	45 55	Y225M−4 Y250M−4			✓	✓ ✓		✓ ✓	943	538	592	363
SHA(R)-150/100D-GR	83.6 162.1 212.4	15.4 14.6 12.5	65	9.91	2.8	800	15 18.5 18.5	Y160L−4 Y180M−4 Y200L−6		✓ ✓		✓ ✓		✓	1021	736	668	626
SHA(R)-150/100D-GR	94.1 182.4 239	19.6 18.5 15.8	65	14.13	2.8	900	22 30 30	Y180L−4 Y200L−4 Y225M−6		✓ ✓		✓ ✓		✓	1021	736	668	626
SHA(R)-150/100D-GR	102.5 198.6 260.2	23.2 21.9 18.8	65	18.24	3	980	30 37	Y225M−6 Y250M−6					✓ ✓		1021	736	668	626
SHA(R)-150/100D-GR	145.6 202.7 265.6	24.1 22.8 19.5	65	19.38	3	1000	30 37 37	Y200L−4 Y225S−4 Y250M−6		✓		✓ ✓		✓	1021	736	668	626

注：1.带*记号为配底座； 2.所列性能均为清水条件下性能
Notice: 1. Markings with ＊is auxiliary base; 2. The data listed above are that of clear water performance.

‖ www.gorrifpumps.com ‖

SHA(R)、SHH(R)系列渣浆泵
SHA(R)/SHH(R) Series Slurry Pump

型号 Type	流量 Capacity (m^3/h)	扬程 Head (m)	效率 Efficiency (%)	轴功率 Shaft Power (kw)	必需汽蚀余量 (NPSH)r (m)	转速 Speed (r/min)	配带电机 Matched Motor 功率 Power (kw)	配带电机 Matched Motor 型号 Type	传动形式 Drive Mode DC	CV	ZV	CR	* DC	* CR	外形尺寸 Outline Dimension (mm) 长 Length	宽 Width	高 Height	泵重 Weight (kg)
SHA(R)-150/100D-GR	115 222.9 292	29.2 27.6 23.7	65	25.77	3.5	1100	30 37 45	Y200L−4 Y225S−4 Y225M−4		✓		✓ ✓		✓ ✓	1021	736	668	626
SHA(R)-150/100D-GR	125.5 243.2 318.7	34.7 32.8 28.1	65	33.42	4	1200	45 55	Y225M−4 Y250M−4			✓	✓ ✓		✓ ✓	1021	736	668	626
SHA(R)-150/100D-GR	135.9 263.5 345.2	40.7 38.5 33	65	42.5	4.3	1300	55	Y250M−4			✓	✓		✓	1021	736	668	626
SHA(R)-150/100E-GR	115 222.9 292	29.2 27.6 23.7	65	25.77	3.5	1100	37 45	Y225S−4 Y225M−4		✓ ✓					1180	736	800	797
SHA(R)-150/100E-GR	125.5 243.2 318.7	34.7 32.8 28.1	65	33.42	4	1200	45 55	Y225M−4 Y250M−4		✓	✓	✓			1180	736	800	797
SHA(R)-150/100E-GR	135.9 263.5 345.2	40.7 38.5 33	65	42.5	4.3	1300	55 75	Y250M−4 Y280S−4			✓	✓		✓	1180	736	800	797
SHA(R)-150/100E-GR	146.4 283.7 371.7	47.3 44.7 38.3	65	53.1	4.8	1400	75 90	Y280S−4 Y280M−4				✓ ✓		✓ ✓	1180	736	800	797
SHA(R)-150/100E-GR	154.8 300 393.1	52.9 50 42.9	65	62.85	5.2	1480	90 110	Y280M−4 Y315S−4	✓ ✓				✓		1180	736	800	797
SHA(R)-150/100E-GR	156.8 304 398.3	54.3 51.3 44	65	65.34	5.3	1500	90 110	Y280M−4 Y315S−4				✓ ✓		✓ ✓	1180	736	800	797
SHA(R)-200/150E-GR	126 225 324	12 11.4 10	51 66 72	8.1 10.6 12.3	2 2 2	500	18.5 22	Y225S−8 Y225M−8		✓ ✓		✓ ✓		✓	1302	1005	920	1473
SHA(R)-200/150E-GR	126 252 360	14.6 13.5 12.2	50 67 72	10 13.8 161	2 2 2	550	22 30	Y225M−8 Y250M−8		✓ ✓				✓	1302	1005	920	1473
SHA(R)-200/150E-GR	144 270 396	17.4 16.3 14.6	50 66 72	13.7 18.2 21.9	2 2 2.5	600	30 37	Y250M−8 Y280S−8		✓	✓	✓ ✓		✓	1302	1005	920	1473
SHA(R)-200/150E-GR	162 306 432	20.2 19 17	50 67 72	17.8 23.6 27.8	2 2 3	650	37 45	Y280S−8 Y280M−8			✓ ✓	✓ ✓		✓	1302	1005	920	1473

注：1.带*记号为配底座； 2.所列性能均为清水条件下性能
Notice: 1. Markings with ＊is auxiliary base; 2. The data listed above are that of clear water performance.

‖ www.gorrifpumps.com ‖

型号 Type	流量 Capacity (m³/h)	扬程 Head (m)	效率 Efficiency (%)	轴功率 Shaft Power (kw)	必需汽蚀余量 (NPSH)r (m)	转速 Speed (r/min)	配带电机 Matched Motor 功率 Power (kw)	型号 Type	传动形式 Drive Mode DC	CV	ZV	CR	*DC	*CR	外形尺寸 Outline Dimension (mm) 长 Length (mm)	宽 Width (mm)	高 Height (mm)	泵重 Weight (kg)
SHA(R)-200/150E-GR	162 306 450	23.6 22.2 20	50 66 72	20.8 28 34	2 2 3.2	700	45 55	Y280S-6 Y280M-6			✓	✓ ✓		✓	1302	1005	920	1473
SHA(R)-200/150E-GR	169.2 324 482.4	26 24.5 22	50 66 72	24 32.8 40.1	2 2 3.5	740	55	Y315S-8	✓						1302	1005	920	1473
SHA(R)-200/150E-GR	180 360 522	30.8 29 26	50 66 72	30.2 43.1 51.31	2 2.4 4.2	800	55 75 75	Y280M-6 Y315S-6 Y280S-4			✓	✓ ✓		✓ ✓	1302	1005	920	1473
SHA(R)-200/150E-GR	197.3 374 554	34.6 33 29.3	50 66 72	37.2 51 61.4	2 2.5 5	850	75 90	Y315S-6 Y315M1-6				✓		✓	1302	1005	920	1473
SHA(R)-200/150E-GR	208.8 396 586.8	38.8 37 32.8	50 66 72	44.1 60.43 72.8	2 3 5.5	900	90 90 110	Y315M-6 Y280M-4 Y315L-6				✓ ✓		✓	1302	1005	920	1473
SHA(R)-200/150E-GR	218.2 413.6 612.7	42.3 40.4 35.8	50 66 72	50.3 69 83	2 3.3 6	940	110	Y315L-6				✓			1302	1005	920	1473
SHA(R)-200/150E-GR	229.3 432 635	46.1 44 38.9	50 66 72	57.6 78.4 93.39	2 4 6.5	980	110	Y315L-6	✓						1302	1005	920	1473
SHA(R)-200/150E-GR	234 441 648	48 45.8 40.5	50 66 72	61.2 83.31 99.23	2 4 7	1000	110	Y315S-4				✓			1302	1005	920	1473
SHA(R)-200/150R-GR	208.8 396 586.8	38.8 37 32.8	50 66 72	44.1 60.43 72.8	2 3 5.5	900	110	Y315L-6				✓			1360	1005	980	1982
SHA(R)-200/150R-GR	218.2 413.6 612.7	42.3 40.4 35.8	50 66 72	50.3 69 83	2 3.3 6	940	110 132	Y315L-6 Y315L-6				✓ ✓			1360	1005	980	1982
SHA(R)-200/150R-GR	229.3 432 635	46.1 44 38.9	50 66 72	57.6 78.4 93.39	2 4 6.5	980	132 160	Y315L-6 Y355M-6	✓ ✓						1360	1005	980	1982
SHA(R)-200/150R-GR	234 441 648	48 45.8 40.5	50 66 72	61.2 83.31 99.23	2 4 7	1000	132 160	Y315M1-4 Y315L-4				✓ ✓ ✓			1360	1005	980	1982
SHA(R)-200/150R-GR	252 439.2 565.2 720	58 53 56 49	50 65 70 72	79.6 97.48 123.08 133.39	4 4 6 8	1100	160 160 185	Y315L-4 Y315L-4 Y315L-4				✓ ✓ ✓			1360	1005	980	1928
SHA(R)-200/150R-GR	270 450 594	62 60 57	50 65 70	91.14 113.07 131.67	4 6 8	1140	160 160 185	Y315L-4 Y315L-4 Y315L-4				✓ ✓ ✓			1360	1005	980	1928

注：1.带*记号为配底座； 2.所列性能均为清水条件下性能
Notice: 1. Markings with ＊is auxiliary base; 2. The data listed above are that of clear water performance.

‖ www.gorrifpumps.com ‖

SHA(R)、SHH(R)系列渣浆泵
SHA(R)/SHH(R) Series Slurry Pump

型号 Type	流量 Capacity (m³/h)	扬程 Head (m)	效率 Efficiency (%)	轴功率 Shaft Power (kw)	必需汽蚀余量 (NPSH)r (m)	转速 Speed (r/min)	配带电机 Matched Motor 功率 Power (kw)	型号 Type	传动形式 Drive Mode DC	CV	ZV	CR	*DC	*CR	外形尺寸 Outline Dimension (mm) 长 Length (mm)	宽 Width (mm)	高 Height (mm)	泵重 Weight (kg)
SHA-250/200ST-GR	216 396 576	14 12.9 11.5	70 74 76	16.47 21.4 25.41	2 2.5	400	45	Y315S-10				✓			1748	1283	1290	3750
SHA-250/200ST-GR	234 432 630	16.1 15.4 14	70 74 76	20.52 27.87 33.83	2 3.2	440	45 55	Y315S-10 Y315M-10				✓ ✓			1748	1283	1290	3750
SHA-250/200ST-GR	252 468 684	19 18 16.3	70 74 76	26.08 35.29 42.76	2 3.5	470	55 75	Y315M-10 Y315L-10				✓ ✓			1748	1283	1290	3750
SHA-250/200ST-GR	270 504 720	21.7 20.1 18.5	70 74 76	31.91 41.18 51.09	2 4	500	75	Y315L-10				✓			1748	1283	1290	3750
SHA-250/200ST-GR	295.2 540 774	25 23.5 21.3	70 74 76	40.2 52.36 63.24	2.4 4.6	540	75 90	Y315L-10 Y355M-10				✓ ✓			1748	1283	1290	3750
SHA-250/200ST-GR	324 576 828	29 27.1 25	70 74 76	51.12 63.45 79.4	3 5.3	580	90	Y355M-10	✓ ✓						1748	1283	1290	3750
SHA-250/200ST-GR	331.2 595 864	31.1 29.2 26.5	70 74 76	56.1 70.62 87.82	3 5.6	600	110	Y315L-8				✓ ✓			1748	1283	1290	3750
SHA-250/200ST-GR	345.6 612 900	33.5 31.7 28.3	70 74 76	63.06 80.05 97.69	3.2 5.6	625	110	Y315L-8				✓ ✓			1748	1283	1290	3750
SHA-250/200ST-GR	360 648 936	36.2 34.2 31	70 74 76	70.98 90.08 111.3	3.5 6.5	650	132 160	Y355M-8 Y355M-8				✓ ✓			1748	1283	1290	3750
SHA-250/200ST-GR	381.6 648 972	39.3 37 33.4	70 74 76	81.68 102.87 124.52	4 7.1	675	160 185	Y355M-8 Y355L-8				✓ ✓			1748	1283	1290	3750
SHA-250/200ST-GR	414 720 1008	42.5 39.8 36.1	70 74 76	95.82 116.48 139.57	2 4.2 8	700	160 185	Y355M-8 Y355L-8				✓ ✓			1748	1283	1290	3750
SHA-250/200ST-GR	432 741.6 1051.2	46 43.1 39.2	70 74 76	108.24 129.92 158.06	2.1 4.5 8.5	730	200 250	Y355L-8 Y355L-8	✓ ✓						1748	1283	1290	3750
SHA-300/250ST-GR	316.8 540 774	12.7 11.8 10.2	60 75 80	18.26 23.14 26.88	2.4	350	45	Y315S-10				✓			1816	1445	1390	4318
SHA-300/250ST-GR	360 630 885.6	16.2 15.2 13.4	60 76 80	26.47 34.21 40.4	2.2 3	400	55 75	Y315M-10 Y315L-10				✓ ✓			1816	1445	1390	4318

注：1.带*记号为配底座； 2.所列性能均为清水条件下性能
Notice: 1. Markings with ＊is auxiliary base; 2. The data listed above are that of clear water performance.

‖ www.gorrifpumps.com ‖

型号 Type	流量 Capacity (m³/h)	扬程 Head (m)	效率 Efficiency (%)	轴功率 Shaft Power (kw)	必需汽蚀余量 (NPSH)r (m)	转速 Speed (r/min)	配带电机 Matched Motor 功率 Power (kw)	型号 Type	传动形式 Drive Mode DC	CV	ZV	CR	*DC	*CR	外形尺寸 Outline Dimension (mm) 长 Length	宽 Width	高 Height	泵重 Weight (kg)
SHA-300/250ST-GR	381.6 684 986.4	19.7 18.5 16.4	60 76 80	34.11 45.33 55.05	2.4 3.2	440	75 90	Y315L–10 Y355M–10				✓ ✓			1816	1445	1390	4318
SHA-300/250ST-GR	414 738 1051.2	22.9 21 18.4	60 76 80	43.01 55.51 65.82	2.6 2.6	470	75 90	Y315L–10 Y355M–10				✓ ✓			1816	1445	1390	4318
SHA-300/250ST-GR	432 774 1116	25.8 23.9 20.8	60 76 80	50.57 66.26 78.98	2 2.8 4	500	90 110	Y355M–10 Y355M–10				✓ ✓			1816	1445	1390	4318
SHA-300/250ST-GR	406.8 828 1170	28.5 26.2 23	60 76 80	52.60 77.70 91.56	2.1 3 4.2	525	110 132	Y315L–8 Y355M–8				✓ ✓			1816	1445	1390	4318
SHA-300/250ST-GR	486 864 1224	31 29 25.2	60 76 80	68.36 89.74 105	2.2 3.1 4.5	550	132	Y355M–8				✓			1816	1445	1390	4318
SHA-300/250ST-GR	504 900 1296	34.1 32 28	60 76 80	77.98 103.2 123.48	2.3 3.3 5	580	160 185	Y355L–10 Y355M–10	✓ ✓						1816	1445	1390	4318
SHA-300/250ST-GR	525.6 936 1332	37 34.2 30.1	60 76 80	88.23 114.66 136.43	2.4 3.5 5.2	600	160 185	Y355M–8 Y355L–8				✓ ✓			1816	1445	1390	4318
SHA-300/250ST-GR	540 972 1393.2	40 37.5 33	60 76 80	98.04 130.6 156.44	2.5 3.8 5.6	625	185	Y355L–8				✓			1816	1445	1390	4318
SHA-300/250ST-GR	648 1134 1620	54.3 50.8 45	60 76 80	159.64 206.34 248.06	3.0 4.5 7.2	730	320 380	JR157–8 JR158–8	✓ ✓						1816	1445	1390	4318
SHA-350/300ST-GR	504 900 1296	16 15 13.5	70 74 77	31.36 49.7 61.9	4 5	300	75 90	Y315L–10 Y355M–10				✓ ✓			1873	1780	1710	6409
SHA-350/300ST-GR	540 954 1368	19 17.8 16	70 74 77	39.9 62.5 77.4	4 5.6	25	90 110	Y355M–10 Y355M–10				✓ ✓			1873	1780	1710	6409
SHA-350/300ST-GR	576 1044 1470	22 20.5 18.7	70 74 77	49.28 78.73 97.18	4.3 6	350	110 132	Y355M–10 Y355L–10				✓ ✓			1873	1780	1710	6409
SHA-350/300ST-GR	612 1080 1584	25.1 23.7 21.2	70 74 77	59.74 94.2 118.72	4.5 6.7	375	132 160	Y355L–10 Y355L–10				✓ ✓			1873	1780	1710	6409
SHA-350/300ST-GR	648 1188 1692	28.6 27 24	70 74 77	72.07 118 143.6	5 7.3	400	160	Y355L–10				✓			1873	1780	1710	6409

注：1.带*记号为配底座； 2.所列性能均为清水条件下性能
Notice: 1. Markings with * is auxiliary base; 2. The data listed above are that of clear water performance.

|| www.gorrifpumps.com ||

SHA(R)、SHH(R)系列渣浆泵
SHA(R)/SHH(R) Series Slurry Pump

型号 Type	流量 Capacity (m³/h)	扬程 Head (m)	效率 Efficiency (%)	轴功率 Shaft Power (kw)	必需汽蚀余量 (NPSH)r (m)	转速 Speed (r/min)	配带电机 Matched Motor 功率 Power (kw)	型号 Type	传动形式 Drive Mode DC	CV	ZV	CR	*DC	*CR	外形尺寸 Outline Dimension (mm) 长 Length	宽 Width	高 Height	泵重 Weight (kg)
SHA-350/300ST-GR	792 1440 2088.6	43 40.5 36.2	70 74 77	132.44 214.6 267.3	4 6.4 10	490	280 330	J^{S}_{R}1510–12 J^{S}_{R}1512–12	✓ ✓						1873	1780	1710	6409
SHA-350/300ST-GR	943.2 1692 2455.2	60.6 57.6 51.6	70 74 77	222.28 358.52 447.88	4.9 8 13	585	480	J^{S}_{R}1512–10	✓						1873	1780	1710	6409
SHH-40/25C-GR	5.04 10.08 10.12	37.4 37 36.2	10 18 25	5.13 5.64 3.99	2	1400	7.5 11	Y132M–4 Y160M–4				✓ ✓			759	518	509	318
SHH-40/25C-GR	5.26 10.44 15.48	40.7 40.3 39.5	10 18 24	5.83 6.93 6.32	2	1460	11	Y160M–4					✓		759	518	509	318
SHH-40/25C-GR	5.4 10.44 15.48	43 42.5 42	10 18 24	6.4 6.7 7.4	2	1500	11 11 15 15	Y160M–4 $Y160M_1$–2 Y160L–4 $Y160M_2$–2		✓ ✓		✓ ✓		✓ ✓	759	518	509	318
SHH-40/25C-GR	5.58 10.8 15.84	49 48.3 47.5	10 17 23	7.44 8.4 8.9	2.2	1600	11 15 15	Y160M–4 Y160L–4 Y160M2–2		✓		✓ ✓		✓ ✓	759	518	509	318
SHH-40/25C-GR	5.94 11.16 16.2	55 54.5 53.8	10 16 22.5	8.9 10.34 10.54	2.2	1700	15 18.5 18.5	Y160L–4 Y180M–4 Y160L–2		✓ ✓		✓		✓ ✓	759	518	509	318
SHH-40/25C-GR	6.3 11.34 16.38	61.5 61 60	10 16 22	10.6 11.8 12.2	2.5	1800	18.5 22 22	Y160L–2 Y180M–2 Y180L–4		✓		✓ ✓		✓	759	518	509	318
SHH-40/25C-GR	6.84 11.88 15.74	68.8 68.4 67.6	10 16 21	12.8 13.8 13.79	2.5	1900	18.5 22 22	Y160L–2 Y180M–2 Y180L–4		✓		✓ ✓		✓	759	518	509	318
SHH-40/25C-GR	7.2 12.24 17.1	76.2 75.2 74	10 16 21	15 15.7 16.4	2.5	2000	22 30	Y180M–2 Y200L–2				✓ ✓		✓	759	518	509	318
SHH-40/25C-GR	7.74 12.6 17.46	83.8 82.9 62.2	10 15 20	17.7 19 14.78	2.5	2100	30	Y200L–2				✓		✓	759	518	509	318
SHH-40/25C-GR	8.1 12.96 18	92 91.3 90	10 15 20	20.3 21.5 22.1	2.5	2200	30	Y200L–2				✓		✓	759	518	509	318
SHH-75/50D-GR	18 45 72	29 30 28	20 38 45	7.1 9.7 12.2	3	850	15 15 18.5	Y180L–6 Y160L–4 Y180M–4		✓		✓ ✓		✓	986	727	749	750
SHH-75/50D-GR	19.44 47.52 75.8	37 37.5 35	20 38 45	9.8 12.8 16	3	950	18.5 22 22	Y180M–4 Y180L–4 Y200L2–6	✓			✓ ✓		✓	986	727	749	750

注：1.带*记号为配底座； 2.所列性能均为清水条件下性能
Notice: 1. Markings with * is auxiliary base; 2. The data listed above are that of clear water performance.

|| www.gorrifpumps.com ||

型号 Type	流量 Capacity (m³/h)	扬程 Head (m)	效率 Efficiency (%)	轴功率 Shaft Power (kw)	必需汽蚀余量 (NPSH)r (m)	转速 Speed (r/min)	配带电机 Matching motor type		传动形式 Drive Mode						外形尺寸 Outline Dimension (mm)			泵重 Weight (kg)
							功率 Power (kw)	型号 Type	DC	CV	ZV	CR	*DC	*CR	长 Length (mm)	宽 Width (mm)	高 High (mm)	
SHH-75/50D-GR	19.8 40.02 75.6	39.2 39.7 37.8	20 38 45	10.56 11.38 17.3	3	980	30	Y225M−6					✓		986	727	749	750
SHH-75/50D-GR	21.6 50.04 78.12	45.1 45.5 44	20 37 45	13.3 16.8 20.8	3	1050	30 30 37	Y200L−4 Y225M−6 Y225S−4		✓	✓	✓		✓	986	727	749	750
SHH-75/50D-GR	24.48 52.56 80.64	54.8 55 53	20 35 44	18.3 22.5 26.5	3	1150	37 45	Y225S−4 Y280S−6			✓ ✓	✓ ✓		✓ ✓	986	727	749	750
SHH-75/50D-GR	27 55.08 82.8	64.3 65.1 63.8	20 34 44	23.63 28.7 32.68	3	1250	45 55	Y225M−4 Y250M−4			✓	✓		✓	986	727	749	750
SHH-75/50D-GR	28.8 56.88 84.6	75.2 75.5 74	20 33 42	29.5 35.5 40.6	3	1350	45 55	Y225M−4 Y250M−4			✓	✓		✓	986	727	749	750
SHH-75/50D-GR	30.6 58.68 86.4	87 88 86	20 33 42	36.24 42.60 48.2	3.2	1450	55 75	Y250M−4 Y280S−4				✓		✓	986	727	749	750
SHH-100/80E-GR	35 79.2 122.4	18 17.5 16	20 35 42	8.57 10.78 12.7	1.8	600	18.5	Y225S−8		✓		✓		✓	1240	902	889	1250
SHH-100/80E-GR	39.6 86.4 129.6	25 24 22.5	20 38 44	13.48 14.86 18.04	1.8	700	30 30	Y250M−8 Y225M−6		✓		✓		✓	1240	902	889	1250
SHH-100/80E-GR	43.2 90 136.8	32.5 31.5 29.7	27 40 46	14.2 19.3 24.1	1.5 1.8 2.7	800	30 45 45	Y225M−6 Y280S−6 Y225M−4		✓ ✓		✓ ✓		✓ ✓	1240	902	889	1250
SHH-100/80E-GR	46.8 95.4 144	40.7 39.5 37.5	27 40 47	19.2 25.64 31.3	1.5 1.8 2.7	900	45 45 55	Y225M−4 Y280S−6 Y280M−6		✓	✓ ✓	✓ ✓		✓ ✓	1240	902	889	1250
SHH-100/80E-GR	50.4 100.8 151.2	48 46.8 44.8	27 40 48	24.4 32.1 38.5	1.5 1.8 2.8	980	45 55	Y280S−6 Y280M−6	✓ ✓						1240	902	889	1250
SHH-100/80E-GR	52.2 106.2 153	50.1 48.8 46.6	27 40 48	38.42 35.27 40.43	1.5 1.9 2.9	1000	45 55 75	Y250M−4 Y280M−6 Y315S−6		✓	✓	✓ ✓		✓ ✓	1240	902	889	1250
SHH-100/80E-GR	57.6 111.6 165.6	61 60 57	27 40 48	35.42 45.6 53.53	1.5 1.8 3.1	1100	75 90	Y280S−4 Y280M−4				✓ ✓		✓ ✓	1240	902 902	889	1250
SHH-100/80E-GR	64.8 122.4 176.4	72.5 70.1 67.5	28 40 47	45.7 58.4 69	1.5 2.1 3.4	1200	90 110	Y280M−4 Y315S−4				✓ ✓		✓ ✓	1240		889	1250

注：1.带*记号为配底座； 2.所列性能均为清水条件下性能
Notice: 1. Markings with ＊is auxiliary base; 2. The data listed above are that of clear water performance.

www.gorrifpumps.com

SHA(R)、SHH(R)系列渣浆泵
SHA(R)/SHH(R) Series Slurry Pump

型号 Type	流量 Capacity (m³/h)	扬程 Head (m)	效率 Efficiency (%)	轴功率 Shaft Power (kw)	必需汽蚀余量 (NPSH)r (m)	转速 Speed (r/min)	配带电机 Matching motor type		传动形式 Drive Mode						外形尺寸 Outline Dimension (mm)			泵重 Weight (kg)
							功率 Power (kw)	型号 Type	DC	CV	ZV	CR	*DC	*CR	长 Length (mm)	宽 Width (mm)	高 High (mm)	
SHH-100/80E-GR	72 129.6 187.2	85.1 83.2 80	28 40 47	59.6 73.4 86.8	1.5 2.2 3.7	1300	110	Y315S−4				✓			1240	902	889	1250
SHH-150/100F-GR	100 180 250	36 35.5 34	40 52 60	24.5 33.5 38.6	2 2 2	600	45 55	Y315S−10 Y315M−10				✓ ✓			1556	1207	1156	3420
SHH-150/100F-GR	122 198 280	48 47 46	40 52 60	39.9 48.7 58.4	2 2 2.2	700	75 90	Y315M−8 Y315L−8				✓ ✓			1556	1207	1156	3420
SHH-150/100F-GR	126 216 306	54 53.5 52.5	40 52 60	46.3 60.5 72.9	2 2 2.5	740	90 110	Y315L−8 Y315L−8	✓ ✓						1556	1207	1156	3420
SHH-150/100F-GR	144 234 325	63 62.5 61	40 52 60	61.8 76.6 90	2 2.2 2.8	800	110 132	Y315L−6 Y315L−6				✓ ✓			1556	1207	1156	3420
SHH-150/100F-GR	150 270 370	79.5 79 77	40 52 60	81.2 111.7 129.3	2 2.5 3.5	900	160 185	Y355M−6 Y355M1−6				✓ ✓			1556	1207	1156	3420
SHH-150/100F-GR	170 290 370	96.5 95 92	40 52 60	111.7 144.3 154.4	2.4 3.2 4.2	990	185 220	Y355M−6 Y355L−6	✓ ✓						1556	1207	1156	3420
SHH-150/100F-GR	175 306 414	98 97 94	40 52 60	116.7 155.4 176.6	2.5 3.2 4.2	1000	220 250	Y355M3−6 Y355M4−6				✓ ✓			1556	1207	1156	3420

注：1.带*记号为配底座； 2.所列性能均为清水条件下性能
Notice: 1. Markings with ＊is auxiliary base; 2. The data listed above are that of clear water performance.

泵的外形尺寸 Pump Outline Dimension

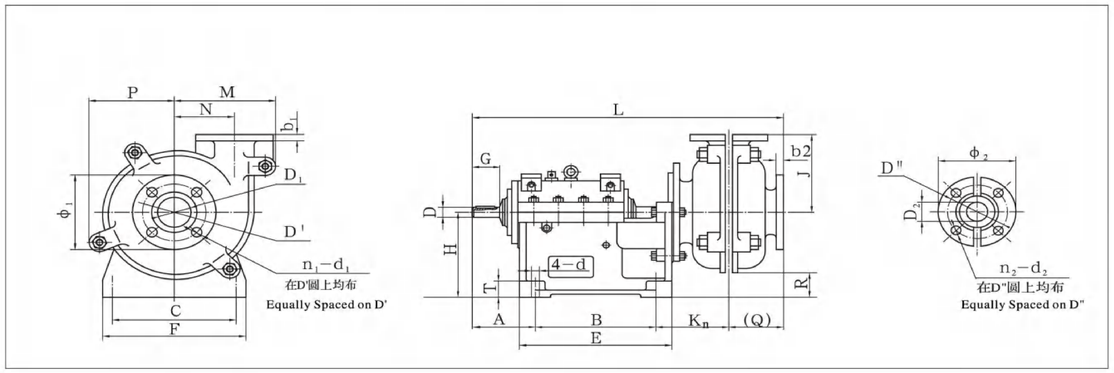

www.gorrifpumps.com

外形尺寸表 Outline Dimension Sheet

型 号 Type	A	B	C	D	E	F	G	H	J	K	L	M	N	P	Q	R	T	4-d
SHA-40/25B-GR-K1	160	208	250	28	268	286	70	190	171	128	601	181	98	159	105	-39	35	14
SHH-40/25C-GR-K2	206	335	350	42	417	400	100	265	254	182	845	282	194	249	123	0	50	19
SHA-50/40B-GR-K1	160	208	250	28	268	286	70	190	184	130	623	204	114	171	124	-26	35	14
SHA-75/50C-GR-K2	206	335	350	42	417	400	100	265	210	159	852	242	138	185	152	-82	50	19
SHH-75/50D-GR-K3	279	400	450	65	500	510	140	360	368	225	1104	389	254	346	199	21	60	22
SHA-100/75C-GR-K2	206	335	350	42	417	400	100	265	262	206	933	307	149	239	186	-35	50	19
SHA-100/75D-GR-K3	279	400	450	65	500	510	140	360	262	234	1100	292	149	243	180	-116	60	22
SHH-100/80E-GR-K5 Ⅰ	356	420	460	80	529	540	170	450	432	282	1299	506	330	432	240	4	75	27
SHA-150/100D-GR-K3	279	400	450	65	500	510	140	360	338	249	1147	406	229	343	221	-19	60	22
SHA-150/100E-GR-K5 Ⅰ	356	420	460	80	529	540	170	450	338	261	1251	406	229	343	221	-110	75	27
SHH-150/100F-GR-K7	452	570	720	100	720	810	270	600	546	361	1688	616	413	591	305	-16	95	35
SHA-200/150E-GR-K5 Ⅰ	356	420	460	80	529	540	170	450	458	303	1373	557	318	458	297	69	75	27
SHA-200/150R-GR-K5 Ⅱ	383	460	460	85	590	540	170	500	458	315	1448	557	318	458	297	13	75	27
SHA-250/200ST-GR-K6	455	740	780	120	890	980	280	630	635	440	1968	667	419	610	334	-7	95	33
SHA-300/250ST-GR-K6	455	740	780	120	890	980	280	630	674	461	2037	755	464	689	381	85	95	33
SHA-350/300ST-GR-K6	455	740	780	120	890	980	280	630	832	486	2087	944	629	842	406	244	95	33

注：泵身下部超过托架底面时，R为正值，反之为负值。
Note: In case that the pump lower part goes beyond the bracket bottom, then R is of positive value. Otherwise, it is of negative value.

型 号 Type	吸入口法兰 Inlet Flange						吐出口法兰 Outlet Flange					
	Φ_1	D_1	D'	b_1	n_1	d_1	Φ_2	D_2	D"	b_2	n_2	d_2
SHA-40/25B-GR-K1	152	38	114	19	4	16	165	25	127	19	4	16
SHH-40/25C-GR-K2	152	38	114	23	4	17	152	25	114	23	4	17
SHA-50/40B-GR-K1	184	51	146	20	4	19	165	38	127	20	4	19
SHA-75/50C-GR-K2	216	76	178	25	4	19	195	51	146	25	4	19
SHH-75/50D-GR-K3	216	76	178	30	8	19	203	51	165	30	4	19
SHA-100/75C-GR-K2	279	102	235	28	4	22	229	76	191	28	4	22
SHA-100/75D-GR-K3	279	102	235	25	4	22	229	76	191	25	4	22
SHH-100/80E-GR-K5 Ⅰ	254	102	210	30	8	19	254	76	210	26	8	19
SHA-150/100D-GR-K3	337	152	292	27	4	22	279	102	235	35	4	22
SHA-150/100E-GR-K5 Ⅰ	337	152	292	27	4	22	279	102	235	35	4	22
SHH-150/100F-GR-K7	337	152	292	38	8	22	305	102	260	38	8	22
SHA-200/150E-GR-K5 Ⅰ	408	202	356	32	8	22	370	152	324	32	8	22
SHA-200/150R-GR-K5 Ⅱ	408	202	356	32	8	22	370	152	324	32	8	22
SHA-250/200ST-GR-K6	502	254	445	38	8	29	432	203	375	38	8	29
SHA-300/250ST-GR-K6	527	305	470	38	8	25	527	254	470	38	12	25
SHA-350/300ST-GR-K6	585	356	521	44	12	25	552	305	495	44	12	25

www.gorrifpumps.com

泵传动形式图 Drive From Graph of Pump

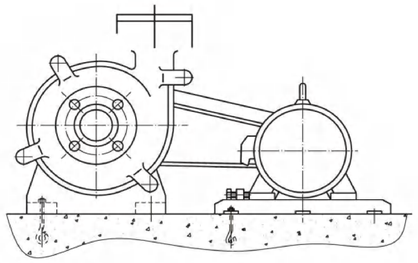

“CR”传动形式（无座）
“CR”Drive From (Without Base)

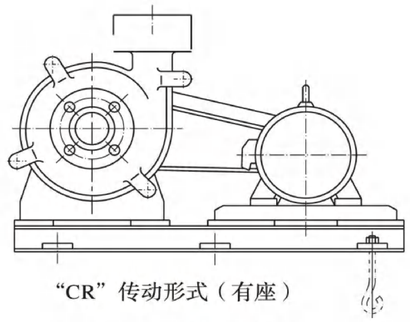

“CR”传动形式（有座）
“CR”传动形式（有座）
“CR”Drive From (With Base)

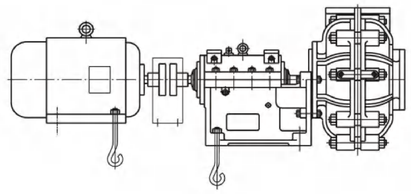

“DC”传动形式（无座）
“DC”Drive From (Without Base)

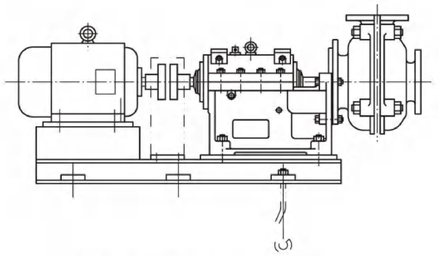

“DC”传动形式（有座）
“DC”Drive From (With Base)

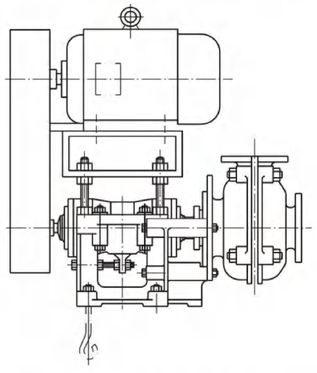

“CV”传动形式（仅用于筒式托架）
“CV”Drive From (Only for Cylinder Bracket)

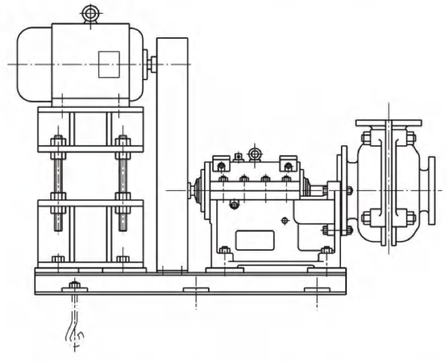

“ZV”传动形式（开式托架）
“ZV”Drive From (For OpenType Bracket)

www.gorrifpumps.com