GORRIF PUMP SOLUTIONS

YOUR STABLE FLOW

GORRIF PUMP SOLUTIONS

www.gorrifpumps.com

Email: sales@gorrifpumps.com
Tel: +86 021 6097 0158
Mob: +86 150 0085 4420
Address：3rd Floor, Building 1, Powerlong City Plaza, No.2449 Jinhai Rd.,
Pudong, Shanghai 201209, China.

GORRIF PUMP SOLUTONS CO.
Copyright ©2020 All Rights Reserved.

Gorrif Pump Solutions Co.

Gorrif Pump Solutions Co.

We are an international high-tech enterprise registered in Lingang Free Trade Zone of Shanghai Yangshan Port.

As an expert and leader in the total solution of Chinese pump and fluid handling industry, Sanlian Pump, one of Gorrif's shareholder, was established in 1957, and has continued to focus on the manufacture and sale of split-case pump, slurry pump, submersible pump, etc., which are widely applied in metallurgy, mining, electricity, chemical, petroleum, municipal, water conservancy, construction and other fields.

Sanlian Pump has one of the most advanced pump test center with 4000kW power and 30000㎥/h flow rate in China, and the test precision meets the standard requirements of GB/T3216-2005. Our pumps comply with ISO, ASME, API, GB and JIS and other international standards.

As a platform for Sanlian's export to the international market, Gorrif focuses on EPC and ODM business of total solutions for pumps and water treatment.

5 Categories of Pumps

First-Class Quality

Total Solutions

OUR MISSION

We are committed to providing global customers with customizable fluid handling solutions.

CORE VALUE

Profession

Customization

Efficiency

Enterprise

Gorrif Pump Solutions
Excellent Facilities ensure Excellent Quality

Mature Supply Chain | Experienced Manufacturer | Integrated Solutions

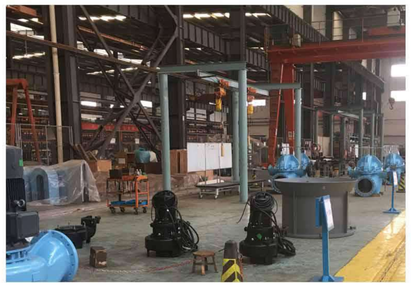

Gorrif Pumps
Your Stable Flow

Slurry Pump / Submersible Sewage Pump
Split-Case Pump / Self-Priming Pump
End Suction Pump

Liquid temperatures ≤80°C

SPE(R) Series hot water pump for handling-water at temperatures ≤120°C

Iron & Steel | Mining | Power Plant | Municipal | Hospital | Hotel | Water Treatment | Irrigation

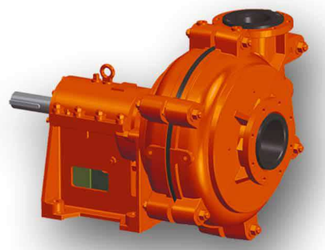

SHA(R)/SHH(R) Slurry Pump
Capacity: 3.6-2455.2m³/h
Head: 5-98m

SHV Slurry Pump
Capacity: 7.2-824.4m³/h
Head: 5-34m

QW Sewage Pump
Capacity: 18-3750m³/h
Head: 5-60m

QWN Sewage Pump
Capacity: 18-3750m³/h
Head: 5-60m

ZW Self-Priming Pump
Capacity: ≤800m³/h
Head: ≤32m

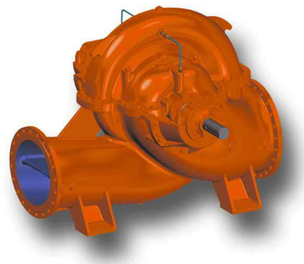

CS(V) Split-Case Pump
Capacity: ≤30000m³/h
Head: ≤200m

SPEZ End-Suction Pump
Capacity: 6.3-720m³/h
Head: 5-125m

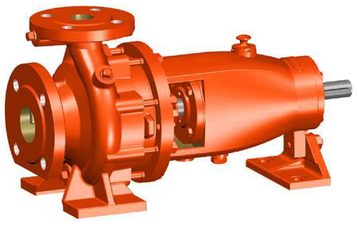

SPE(R) Hot Water Pump
Capacity: 6.3-720m³/h
Head: 5-125m

Vertical / Horizontal

Slurry Pump

SHA(R) SHH(R) SERIES

SHA(R) / SHH(R) Series slurry pump is single-stage single-suction cantilever horizontal centrifugal pump.

It is designed for meeting requirements to transport liquids containing floating particles, as in metallurgy, mines, coal, electricity and construction industry. It can transport high density slurry containing highly hard abrasive particles like concrete, coal cinder, cement, clay, grit, etc.

The temperature of slurry can not be more than 80℃, and the slurry density can reach 60% in weight.

SHV SERIES

SHV Series slurry pumps is vertical centrifugal sump pump, which is put under water. It is applied in mines, coal mining, metallurgy, and electricity, etc. It can be used to transport abrasive, coarse granules and highly dense slurry.

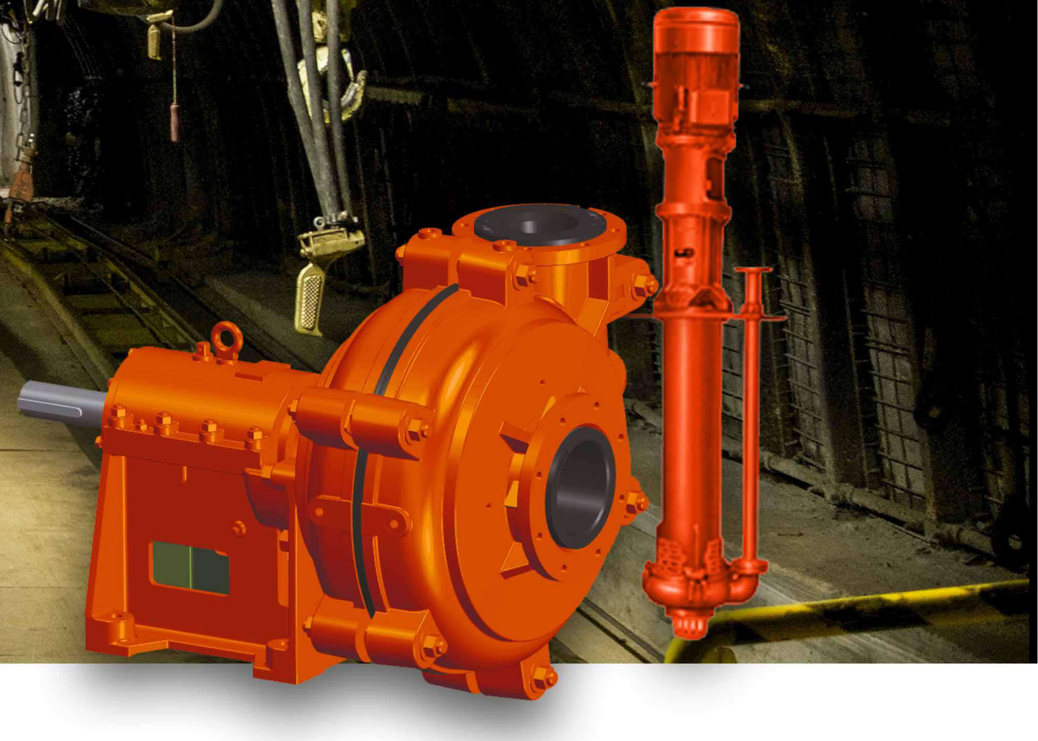

Iron & Steel | Mining | Power Plant | Municipal

Slurry Pump
SHA(R) / SHH(R) Series

- Rubberized dredge
- Metal dredge

PERFORMANCE

Model	SHA Series	SHH Series	SHAR Series	SHHR Series
Type	Normal	High Pressure	Normal Rubberized Dredge	High Pressure Rubberized Dredge
Inlet diameter	40-350mm			
Outlet diameter	25-300mm			
Capacity	3.6-2455.2m³/h			
Single Stage Head	5-98m			
Speed	25-3800r/min			
Matched Motor Pow	2.2-480kW			

STRUCTURAL ILLUSTRATION

1. Shaft
2. Bracket Cover
3. Frame Plate Liner Insert
4. Shaft Sleeve
5. Stuffing Box
6. Bracket Body
7. Volute Liner
8. Impeller
9. Throat bush
10. Cover Plate
11. Frame Plate
12. Shaft Seal
13. Bearing

Metal dredge

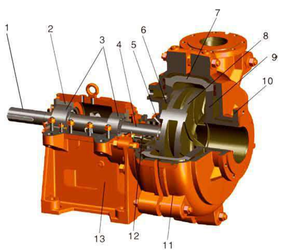

1. Impeller
2. Front Sheath
3. Back Sheath
4. Frame Plate
5. Stuffing Box
6. Shaft Seal
7. Shaft Sleeve
8. Shaft
9. Bracket
10. Bearing

Rubberized dredge

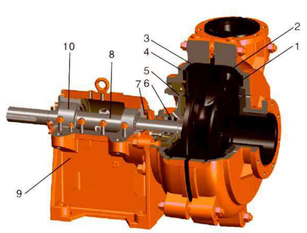

APPLICATIONS

Iron & Steel | Mining | Power Plant | Municipal

Features

01 Axial inlet and radial outlet. Adjustments can be made on the direction of inlet in the direction of circle, of which the limitation angle is 45°.

02 SHA(R) Series slurry pump rotates anticlockwise from the direction of suction side.
Four kinds of drive: DC, CV, ZV, CR.

03 Shaft seal: Soft packing seal or auxiliary impeller seal.

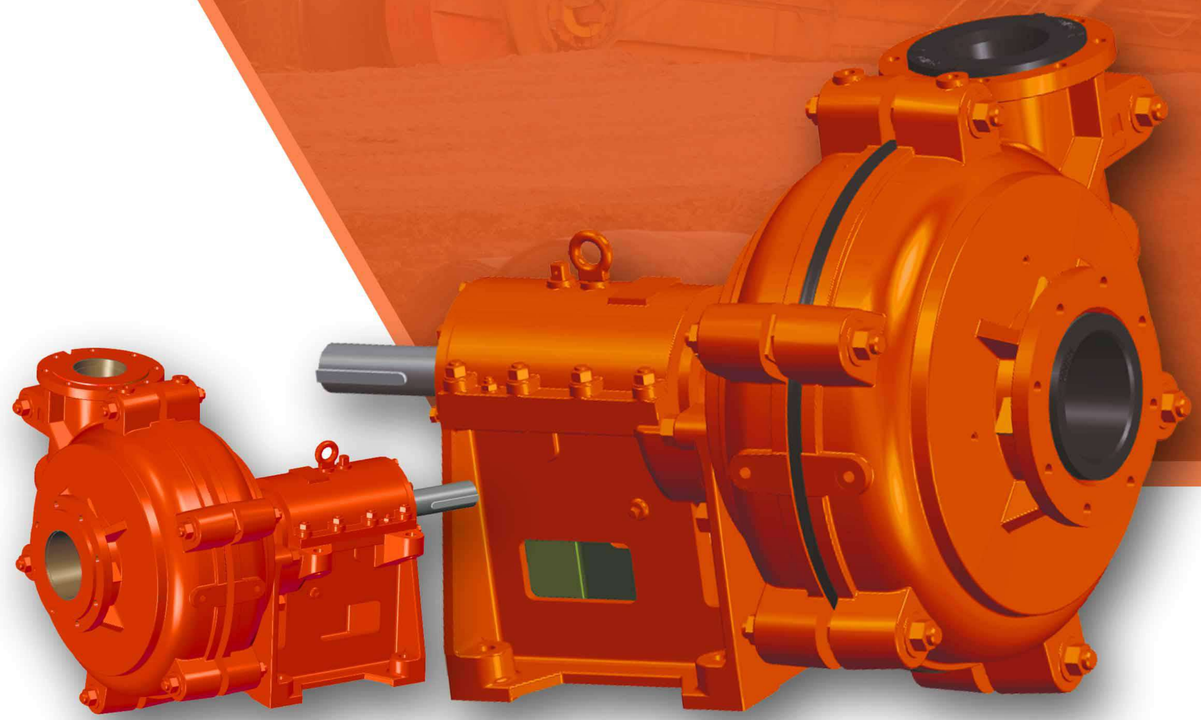

Slurry Pump
SHV Series

PERFORMANCE

Model	SHV Series
Type	Vertical / Centrifugal
Outlet Diameter	40-200mm(1.5"-8")
Capacity	7.2-824.4m³/h
Head	5-34m
Speed	400-2200r/min
Matched Motor power	1.1-160kW

STRUCTURAL ILLUSTRATION

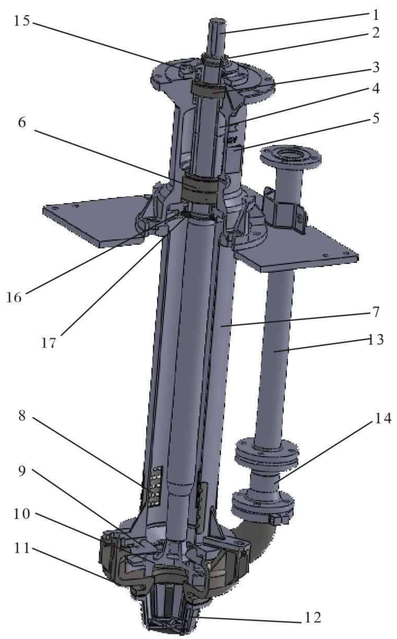

1. Shaft
2. Dustproof Cover
3. Bearing
4. Shaft Sleeve
5. Bearing Assembly
6. Bearing
7. Column
8. Strainer
9. Back liner
10. Impeller
11. Casing
12. Strainer
13. Outlet Pipe
14. Discharge Pipe Take Over
15. Bearing Gland
16. The Bearing Gland
17. Bearing Push TAB

APPLICATIONS

Iron & Steel | Mining | Power Plant

Features

01 Vertical centrifugal slurry pump. Vertically downward inlet and vertically upward outlet.

02 The pump is mainly made up of lower filter screen, pump casing, impeller, shaft, guard plate, bracket and so on.

03 The upper part of pump is supported by bearing.

04 Mounted under water without the need of any shaft seal. Wear-resistant material is applied for wet part.

Submersible Sewage Pump

QW SERIES

QW Series submersible sewage pump is developed by advanced technology. It has the advantages of high efficiency, no clogging, auto-coupling and auto-control, etc. It specializes in discharging of solid granule and long fiber garbage.

QW Series submersible sewage pump is mainly used in urban construction, industry, hospital, building, hotel, restaurant and so on. It is used to transport silt, urban sewage containing solid granule and long fiber.

QWN SERIES

QWN Series submersible sludge pump is developed with agitation head based on the digestion and assimilation of the most advanced domestic and abroad technology. It is characterized by its high efficiency, reliability, wear-resistance, non-clogging, auto-coupling and auto-control. Specialists appraise it at an advanced level in view of its technical performance and specific function.

QWN Series submersible sludge pump is mainly applied municipal engineering, steel plant, power plant, mines and some other wear-resistant sites for discharging sludge and waste water containing solid particles.

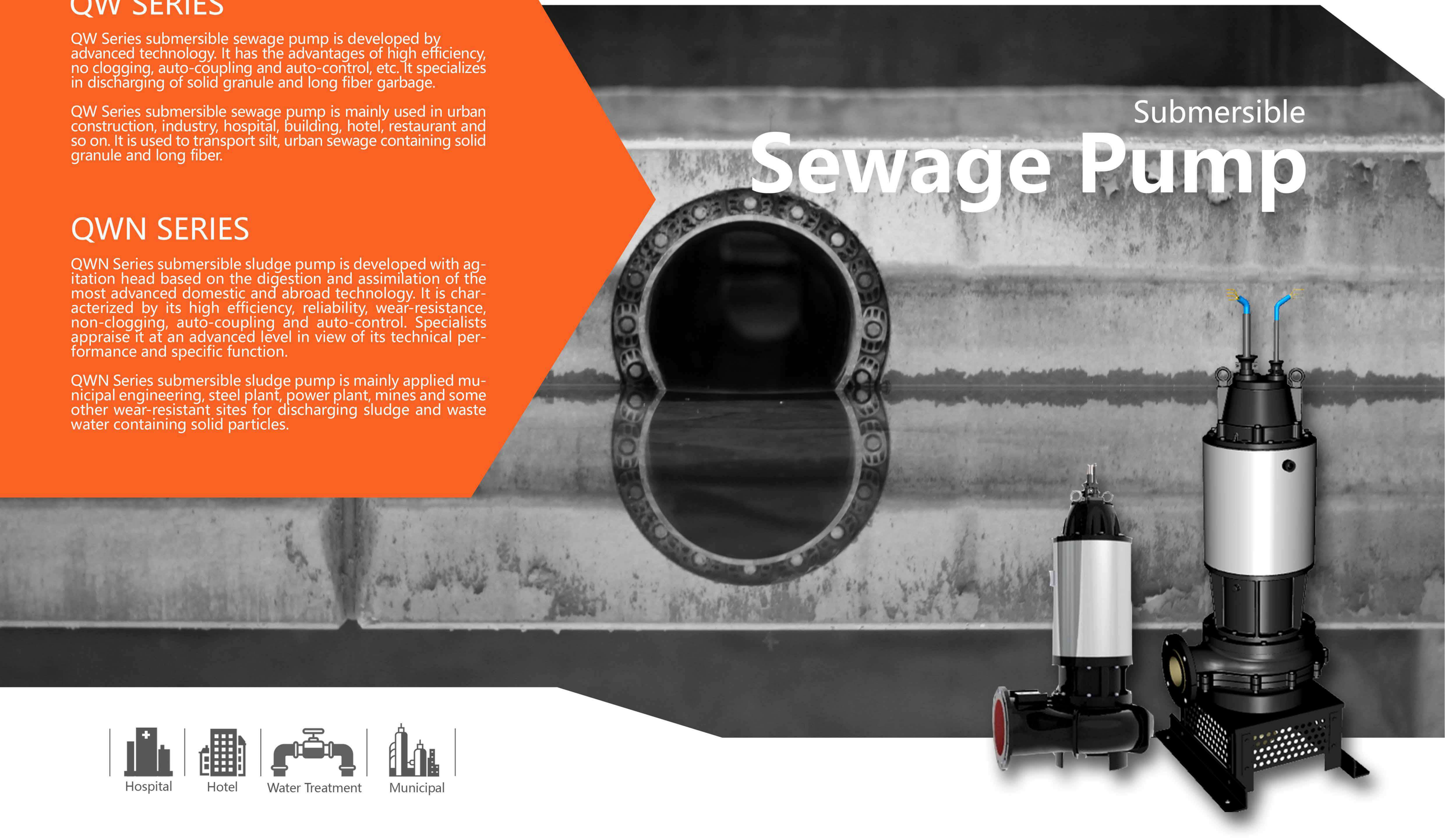

Hospital | Hotel | Water Treatment | Municipal

Sewage Pump
QW Series

PERFORMANCE

Model	QW Series			
Type	Sewage Pump			
Outlet Diameter	50-600mm			
Capacity	18-3750 m³/h			
Head	5-60m			
Speed	740-745r/min	970-990r/min	1430-1470r/min	2480r/min
Matched Motor power	1.5-270kW			

STRUCTURAL ILLUSTRATION

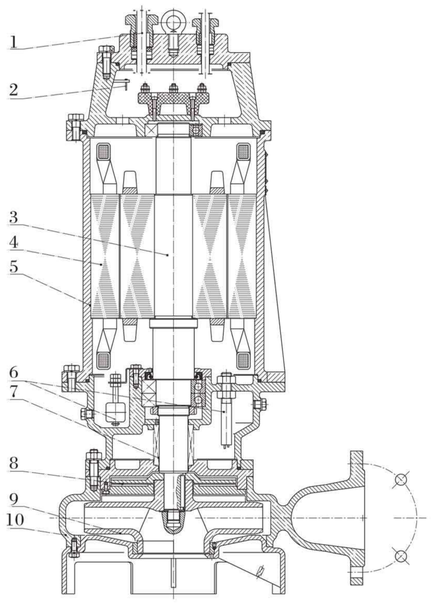

1. Sealing Cable
2. Leakage Detector
3. Rotor
4. Stator
5. Cooling Cover
6. Leakage Alarm
7. Mechanical Seal
8. Expeller
9. Impeller
10. Pump Casing

APPLICATIONS

Hospital | Hotel | Water Treatment | Municipal

Features

01 Compact and reliable structure.

02 Effective design of unique seal cable avoids cable breakage that leads to leakage.

03 Leakage detector inside the wiring chamber alarms if there is leakage inside, with control system protecting the pump.

04 The insulation class for the rotor of the motor is F. Every phase is equipped with overheating and overloaded protective components.

05 Stainless steel is used for the rolling motor shaft. The dynamic balance of rotor is carried out to make pumps run more smoothly.

06 Two sealing detectors to alarm any seal leakage.

Sewage Pump
QWN Series

PERFORMANCE

Model	QWN Series			
Type	Sludge Pump			
Outlet Diameter	50-600mm			
Capacity	18-3750 m³/h			
Head	5-60m			
Speed	740-745r/min	970-990r/min	1430-1470r/min	2480r/min
Matched Motor power	1.5-270kW			

STRUCTURAL ILLUSTRATION

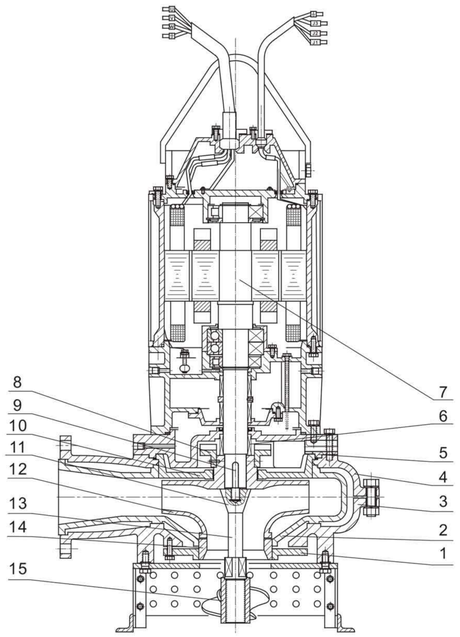

1. Adjustment Cover
2. Pump Casing
3. Lower Shell
4. Upper Shell
5. Pump Cover
6. Single Facing Mechanical Seal
7. Submersible Motor
8. Expeller
9. Key
10. Liner Cover
11. Impeller Nut
12. Impeller
13. Agitation Shaft
14. Diversion Sleeve
15. Agitation Head

APPLICATIONS

Hospital | Hotel | Water Treatment | Municipal

Features

01 Safe and reliable. F class motor insulation. Trustworthy protection system with overheating and overloaded protective components, control system leakage detector installed.

02 Motor rotational shaft is made of stainless steel. Robust static and dynamic test makes the pump operate smoother. Branded bearing is applied for the driver that ensures reliable performance.

03 A dislodgement plate is fixed at the inlet of the isolated area. This drives the solid particles out of the isolated areas.

04 Three-layer mechanical seal greatly enhances the wear-resistant performance. Sealing material: tungsten carbide.

05 Alloy steel is used for the flow part. Jacket structure for easy maintenance and replacement.

06 Applied in extreme working conditions.

07 The agitation head can also be mounted if necessary to avoid the solid particles on the pond bottom from settling down. Easy adjustment on capacity. Great for model selection.

CS(V) SERIES

CS(V) Series pump is a new generation of single-stage double-suction split casing centrifugal pump, based on the advanced pump manufacturing technology.

It is mainly applied in water supply plants, power stations, industrial water supply system, air conditioning circulation water, high-rise water supply, irrigation, pump stations, and so on.

Double-suction

Split-Case Pump

Circulation Water | Water Supply | Power Plant

Split-Case Pump
CS(V) Series

PERFORMANCE

Model	CS Series	CSV Series
Type	Horizontal	Vertical
Inlet Diameter	125-1600 mm	
Outlet Diameter	80-1400 mm	
Capacity	≤ 30000 m³/h	
Head	≤ 200 m	
Max Solids	≤ 80mg/L	
Working Temperature	< 80 ℃	
Permitted Working Pressure	≤ 2.5 Mpa	
Permitted Testing Pressure	≤ 3.75 Mpa	

STRUCTURAL ILLUSTRATION

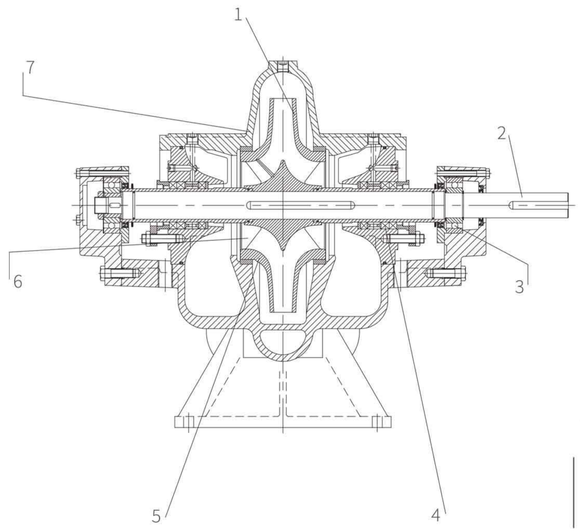

1. Impeller
2. Shaft&Rotor
3. High Quality Bearing
4. Various Shaft Seal Form
5. Wear-Resistance & Corrosion-Resistance, Highly-Intense Materials
6. High Efficiency & Excellent Anti-Cavitation Performance
7. Pump Casing

APPLICATIONS

Circulation Water | Water Supply | Power Plant

Features

01 Compact structure: Aesthetic design, great stability and easy installation.

02 Steady operation: No vortex, smoother operation and have remarkable erosion-resistant ability and high efficiency.

03 Bearing: Excellent bearing is used to assure the steady operation, low noise, long lifespan. *Grease lubrication and closed structure is used.

04 Shaft seal: Mechanical seal or packing seal shall be used. These two kinds of seal are all installed in the removable packing box, which is convenient to assembly and maintenance. The packing gland of pump is removable and open, which assures enough room for maintenance and repair.

05 Impeller: Double suction impeller designed by the best hydraulic model can balance the axial force automatically.

06 Shaft: Shaft is completely sealed without contacting the medium or corrosion.

07 Casing: For the pump of high head, double split casing passage is adopted, which counteracts most of the radial force and prolongs the life of bearing on two sides.

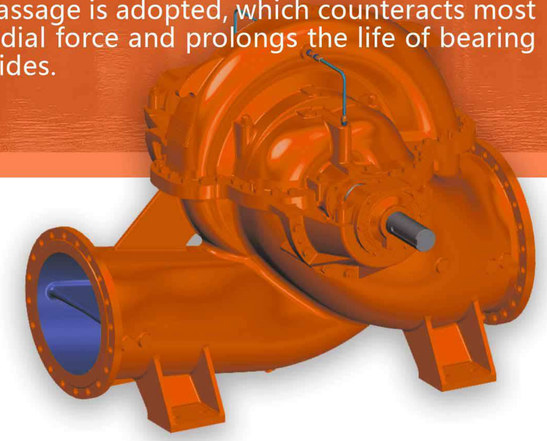

ZW SERIES

Developed by one of the most advanced pumping technology, ZW Series self-priming sewage pumps have single-stage, single-suction, horizontal, gas-liquid mixed type. It is specially designed for the non-malfunction operation to manage liquid and slurry. It is highly appreciated by its anti-clogging, non-winding, strong sundries passing ability. The easy-to-disassemble holes are designed on the front part of the pump to make sure that the large sundries clogged can be cleaned up fast and timely.

ZW Series Self-Priming Pump is widely used in municipal sewage, environmental engineering, petroleum, chemical industry, pharmacy, printing and dyeing, electroplating, household water supply, plant, mining, agriculture, flower nursery, water resource, food,brewing industry etc.

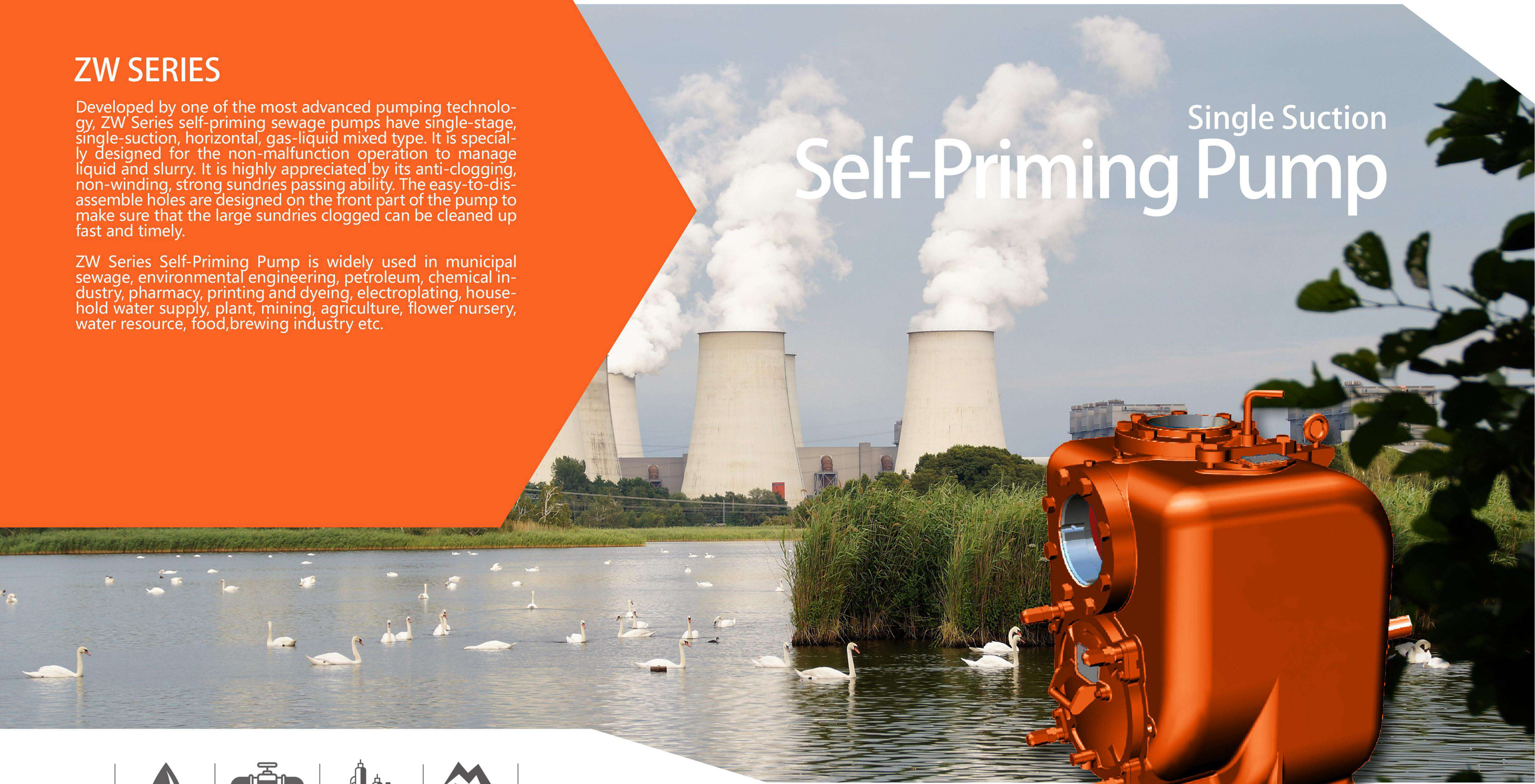

Single Suction
Self-Priming Pump

Irrigation | Dewatering | Municipal | Mining

Self-Priming Pump

ZW Series

PERFORMANCE

Model	ZW Series
Type	Single-stage
Outlet Diameter	50.8-304.8mm
Flow Rate	≤211338 US gal/h
Head	≤32m
Medium Temperature	≤80°C
Maximum Sunction Lift	≤7m
Maximum Solid Particle	≤85m
Specific Gravity	1.0-1.3

DATA SHEET

Model	Net Weight	Shipping Weights	Impeller Diameter	R.P.M	Max Solids
ZW-2H	92kg	114kg	158.75mm	1150rmp-2900rpm	44.45mm
ZW-3H	183kg	205kg	222.25mm	650rpm-2150rpm	63.5mm
ZW-4H	259.5kg	280kg	247.65mm	650rpm-1950rpm	76.2mm
ZW-6H	364kg	391kg	314.32mm	650rpm-1550rpm	76.2mm
ZW-8H	581kg	634kg	374.65mm	650rpm-1350rpm	76.2mm
ZW-10H	635kg	663kg	374.65mm	650rpm-1450rpm	76.2mm
ZW-12H	998kg	1066kg	457.2mm	650rpm-1250rpm	76.2mm
ZW-3L	214kg	225kg	279.4mm	850rpm-2150rpm	20.63mm
ZW-4L	272kg	297kg	279.4mm	850rpm-2150rpm	28.57mm
ZW-6L	413kg	437kg	317.55mm	850rpm-1950rpm	31.75mm

APPLICATIONS

Irrigation | Dewatering | Municipal | Mining

Features

01 Once for all: For your first operation, fill in the pump cavity through water-pouring hole, and there is no need to fill in water afterwards.

02 Half-open anti-clogging impeller ensures particles with large diameter to pass and higher discharge capacity.

03 Non-bolt threaded pipe connection ensures easy installation.

04 High self-priming ability: Perfect sealing clearance ensures that the self-priming height can be up to 8m, with high speed, which greatly shortens the self-priming time.

05 User-friendly in external adjustment: Even if the clearance between impeller and seal plate is getting big, external adjustment can be done easily to make sure steady self-priming height and performance.

06 Fast and easy maintenance: Special design for the sewage and maintenance, adjust the pump without dismantling pump cover and auxiliary pipe to make sure the pump operates under high efficient working condition.

SPEZ SERIES

SPEZ Series pump adopts the advantages of in-line centrifugal pump and overcomes the disadvantages of vertical direct connection pump (When the power is >18.5kw, if the pump has to be dis-assembled or maintained, a lifting equipment shall be needed. Yet it is not the case for SPEZ Series pump).

Its performance applies to Standard of IS02858 while its economic and technological performance reaches beyond national level of standards among similar products.

SPEZ Series pump is directly connected with the motor, which greatly simplifies the middle structure and enhances the operational stability. It also occupies 30% less ground area than the common horizontal pump. Mechanical seal is applied for the shaft seal. The pump is characterized by its long service time, low noise, easy maintenance, low vibration and so on.

SPE(R) SERIES

SPE Series pump is single-stage single-suction(axial suction) centrifugal pump. It has been widely used in various scenarios including water/drainage industry, agriculture irrigation, transporting clear water or liquids with physical or chemical properties similar to clear water. The temperature can be no more than 80℃.

SPER Series hot water pump can transport hot water ⩽120℃.

End Suction

Centrifugal Pump

Irrigation | Water Processing | Municipal

Centrifugal Pump
SPEZ Series

PERFORMANCE

Model	SPEZ Series	
Rate of Rotation	2900r/min	1450r/min
Inlet Diameter	50-300mm	
Capacity	6.3-720m³/h	
Head	5-125m	
Ambient Tempretature	T≤40°C	
Motor Protection Class	IP54 or IP44	
Motor Insulation Class	B or F	

STRUCTURAL ILLUSTRATION

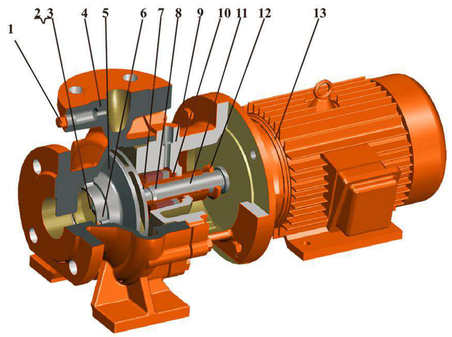

1. Pipe Plug
2. Impeller Nut
3. Washer
4. Casing
5. Impeller
6. Seal Ring
7. Key
8. Shaft Sleeve
9. Directly-connected Pump Cover
10. Mechanical Seal
11. Main Shaft
12. Deflector
13. Motor

APPLICATIONS

Irrigation | Water Processing | Municipal

Features

01 Seal rings at front-and-back cover plate of the impeller and balance holes at the impeller backboard. *For those pumps whose axial forces are not strong, seal rings and balance holes will not be set.

02 Shaft sleeve protection to avoid shaft abrasion is mounted where the shaft passes through the mechanical seal. O-ring is mounted between shaft sleeve and shaft to prevent air from entering and water from leaking along the fit surface.

Hot Water Pump
SPE(R) Series

PERFORMANCE

Model	SPE(R) Series	
Rate of Rotation	2900r/min	1450r/min
Inlet Diameter	50-300mm	
Capacity	6.3-720m³/h	
Head	5-125m	

STRUCTURAL ILLUSTRATION

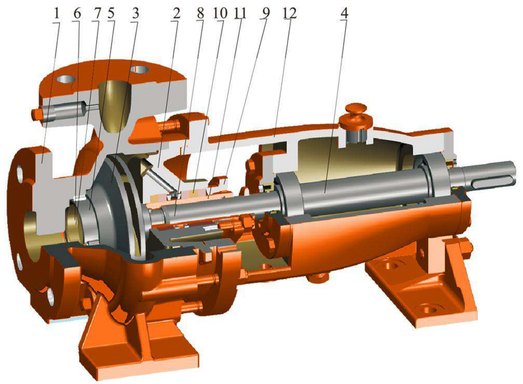

1. Casing
2. Pump Cover
3. Impeller
4. Shaft
5. Seal Ring
6. Impeller Nut
7. Washer
8. Shaft Sleeve
9. Packing Gland
10. Packing Ring
11. Packing
12. Suspension Frame Bearing Part

APPLICATIONS

Irrigation | Water Processing | Municipal

Features

01 Back-opened structure leads to convenient repair on rotor without dismantling the pump casing, inlet and outlet pipeline.

02 Seal rings at front-and-back cover plate of the impeller and balance holes at the impeller backboard. *For those pumps whose axial forces are not strong, seal rings and balance holes will not be set.

03 Shaft sleeve protection to avoid bearing abrasion is installed at the place where the shaft passes through the packing chamber. O-ring is installed between the shaft sleeve and the shaft so as to prevent air from coming in along the fitting surface or water leak.

04 Based on SPEZ Series pump, we have developed the SPE(R) Series hot water pump. A cooling chamber inside the pump cover makes use of normal-pressure cool water to cool down the packing part, so the temperature of medium transported can be as high as 120℃.

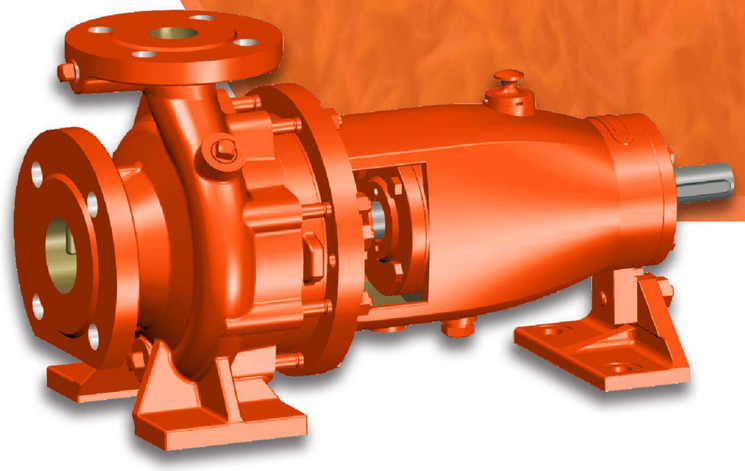

Intelligent Fluid Handling Solutions System

Tailored-To-You Model Selection

Rich experience in helping customers to find their own pumps after careful configuration.

All-In-One Customization Service

Profession in designing total pumping systems according to specific application scenarios.

After-sales Technical support

Promised after-sales supporting team for technical tutorials.

Intelligent Pumping Cloud

Remote monitoring and controling system to collect and transmit real-time data of every pump.

Application Cases
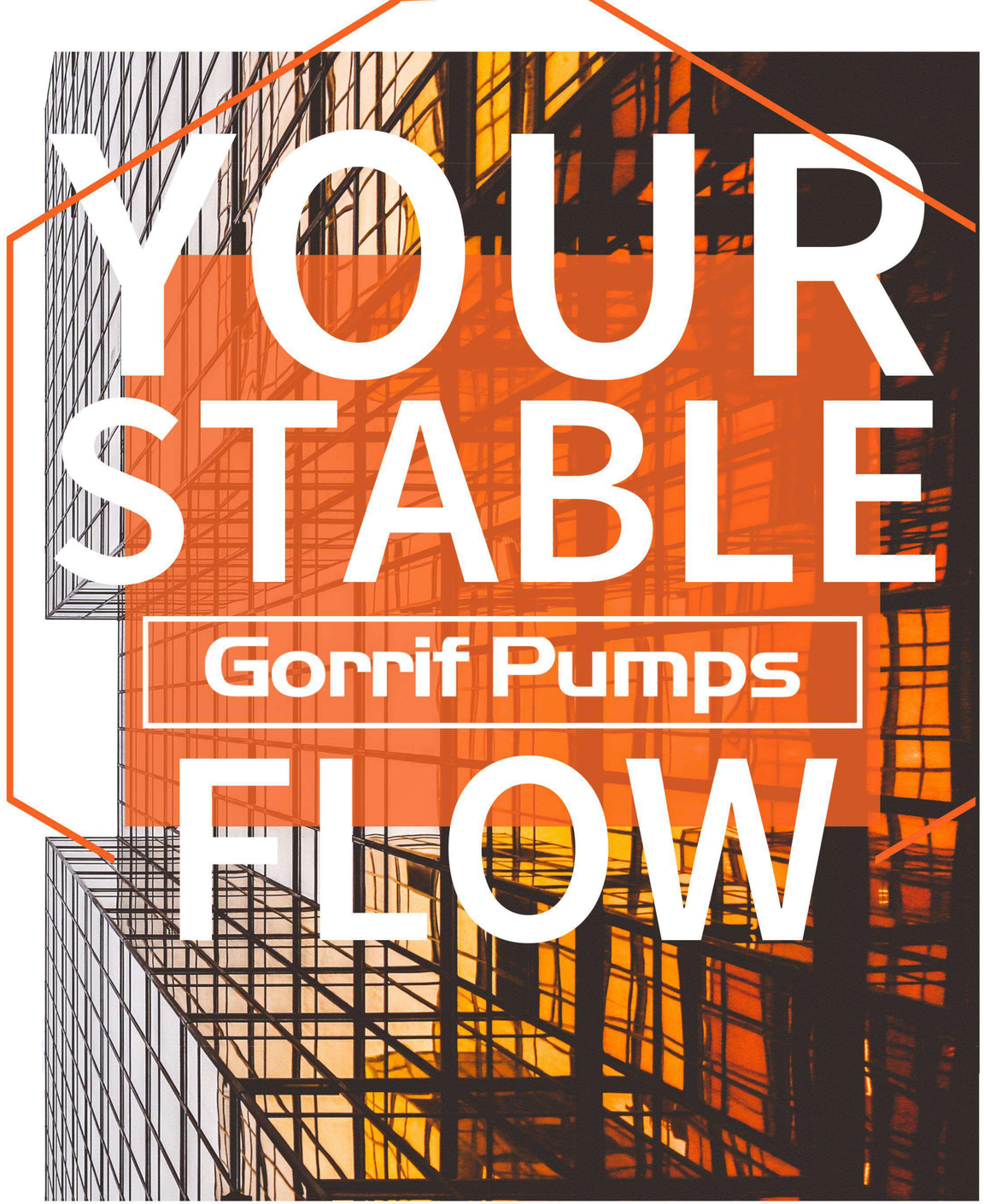
Fluid Handling | Construction | Power Station